昆山奥兰克泵业制造有限公司
AULANK PUMPS MANUFACTURING CO.,LTD

昆山公司 KUNSHAN COMPANY
地址/Add：江苏省昆山市巴城镇东荣路151号
151 Dongrong Road, Bacheng Town, Kunshan City, Jiangsu Province
电话/ Tel： +86-512-55193403 55199569 55199169
传真/Fax： +86-512-55193433
www.aulank.com

广东办事处 GUANGDONG OFFICE
地址/Add：广东省深圳市宝安区松岗镇东方大道田洋三路9号
#9 SanYang Road ,DongFang Street, SongGang Town, BaoAn District,
ShenZhen City ,GuangDong Province
电话/ Tel： 13480652339 13828785862
传真/Fax： +86-755-27737236

AULANK
PUMPS MANUFACTURING
奥兰克泵业

-196°C~+400°C化工高低温泵浦

-196°C~+400°C High & low Temperature Chemical Pump Professional Manufacturing

17年
创新发展与技术沉淀
Innovation development and technology precipitation

20000+家
累计服务企业
Service enterprises

1.7亿
销售额
Sales volume

77项
各项技术专利
Production and storage area

100000+台
年产能
Annual output

100+人
在职员工
On-the-job staff

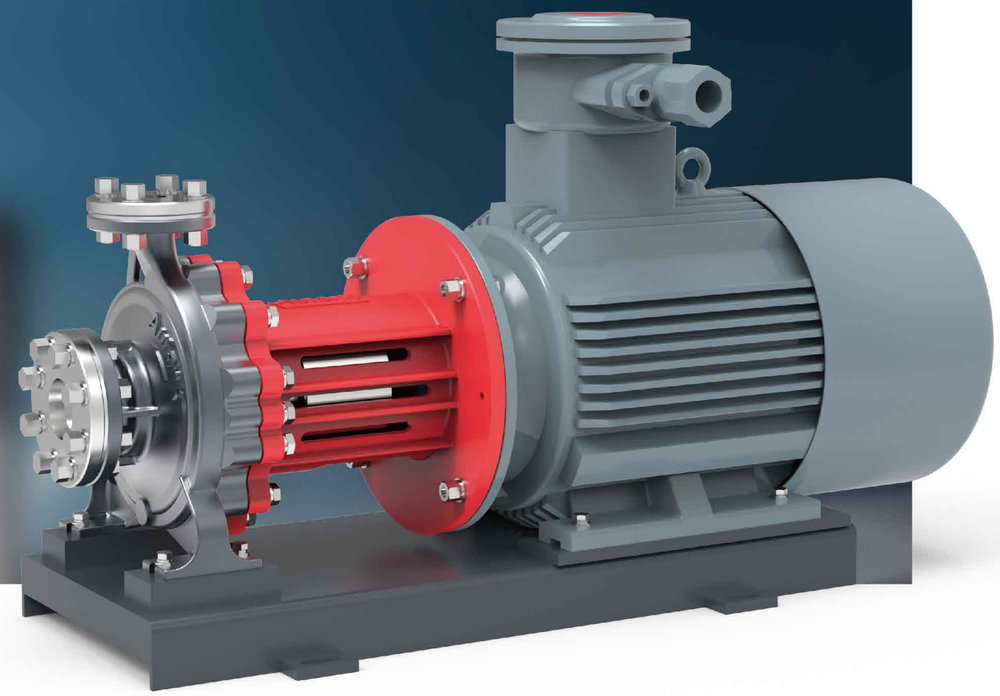

ABOUT US
关于我们

昆山奥兰克泵业制造有限公司成立于2008年，是一家集研发、制造、销售及服务于一体的化工高低温泵专业制造服务商，致力于为用户提供安全、节能、可靠的工业流体输送泵和系统化技术应用解决方案。

公司主营产品：微型磁力齿轮泵、中大型磁力齿轮泵、化工标准离心磁力泵、轻型离心磁力泵、气液混合旋涡磁力泵、高扬程旋涡磁力泵、屏蔽旋涡泵、衬氟磁力泵、同步永磁屏蔽泵、精密旋涡泵、大流量离心泵、小型高压叶片泵等，耐温范围从-196°C至+400°C，可满足极限温度工况需求。同时，我们可以为用户，提供产品OEM、定制特殊电压、频率、防爆等定制化技术服务。产品应用已覆盖新能源、半导体、化工、医药、制冷、环保、食品、汽车、军工、橡塑、焊接、压缩机、印染、石油和通用机械等行业领域。

展望未来，奥兰克泵业将继续秉承创新精神，以更稳定、更节能、更广泛应用的产品和更优质服务为客户创造价值。我们期待与全球合作伙伴建立更紧密的合作关系，共同推动行业发展，共创美好未来！

Kunshan Aulank Pump Manufacturing Co., Ltd. was established in 2008. It is a professional manufacturer and service provider of chemical high and low temperature pumps, integrating research and development, manufacturing, sales, and services. We are committed to providing users with safe, energy-saving, and reliable industrial fluid transfer pumps and systematic technical application solutions.

Main products include micro magnetic gear pumps, medium and large magnetic gear pumps, chemical standard centrifugal magnetic pumps, lightweight centrifugal magnetic pumps, gas-liquid mixed vortex magnetic pumps, high head vortex magnetic pumps,-Canned-Motor Pump, fluorine lined magnetic pumps, synchronous permanent magnet Canned-Motor Pump, precision vortex pumps, large flow centrifugal pumps, small high-pressure vane pumps, etc. The temperature resistance range is from -196 ℃ to+400 ℃, which can meet the requirements of extreme temperature conditions. At the same time, we can provide customized technical services such as product OEM, customized special voltage, frequency, explosion-proof, etc. for users. The product applications have covered industries such as new energy, semiconductors, chemicals, pharmaceuticals, refrigeration, environmental protection, food, automotive, military, rubber and plastic, welding, compressors, printing and dyeing, petroleum, and general machinery.

Looking ahead to the future, Aulank Pump will continue to uphold the spirit of innovation, creating value for customers with more stable, energy-efficient, and widely applicable products and higher quality services. We look forward to establishing closer cooperation with global partners to jointly promote industry development and create a better future!

☆ 本公司保留技术更改的权利，如有修改恕不另行通知。The company reserves the right to change the technology, if there is any change without notice

CULTURE
企业文化

AULANK
PUMPS MANUFACTURING
奥兰克泵业

愿景 VISION

成为全球泵业知名品牌、流体安全输送的领导者、制造世界一流泵类产品

Becoming famous brand in the global pump industry and the leader of safe fluid transportation,manufacturing world’s first-class pumps.

使命 MISSION

专注泵类产品研发制造，推动中国工业创新发展，服务全球工业装备

Concentrating on the pumps’researching and producing , driving innovative development of the Chinese industry , serve global industrial equipment

价值观 VALUE

品牌服务客户，感恩成就梦想，耕耘回馈社会

Brand serve customers , thanksgiving achieve dreams, hard working give back society

核心竞争力 CORE COMPETENCE

专注技术创新、制造优质产品，提供专业服务

Focusing on technological innovation, manufacturing high-quality products, and providing professional services

经营理念 MANAGING PRINCIPLE

创新、品质、诚信、专注、服务

Innovation 、Quality、Integrity 、Concentration 、Service

☆ 本公司保留技术更改的权利，如有修改恕不另行通知。The company reserves the right to change the technology, if there is any change without notice

COMPANY HONORS
企业荣誉

奥兰克泵业深耕化工、高低温流体安全输送领域17年，我们的核心竞争力是源于“专注技术创新、制造优质产品、提供专业服务”，始终致力于为客户创造价值。公司拥有各项技术专利77项，全系列产品通过CE认证、CCC认证，并获得ISO9001质量管理体系认证；先后获得江苏省高新技术企业、江苏省民营科技企业、江苏省专精特新企业、苏州市瞪羚企业、苏州市工程技术研究中心、苏州市守合同重信用企业、昆山市科技研发中心、江苏省名牌产品等多项荣誉。

Aulank pump has been deeply involved in the field of chemical industry, high and low temperature fluid safe transportation for 17 years. Our core competitiveness lies in "focusing on technological innovation, manufacturing high-quality products, and providing professional services", always committed to creating value for customers. The company has 77 technical patents, and all series of products have passed CE certification, CCC certification, and obtained ISO9001 quality management system certification; Has successively won multiple honors such as Jiangsu High tech Enterprise, Jiangsu Private Science and Technology Enterprise, Jiangsu Specialized and Innovative Enterprise, Suzhou Gazelle Enterprise, Suzhou Engineering Technology Research Center, Suzhou Contract abiding and Creditworthy Enterprise, Kunshan Science and Technology Research Center, Jiangsu Famous Brand Product, etc.

NINE SERVICES
九大服务保障

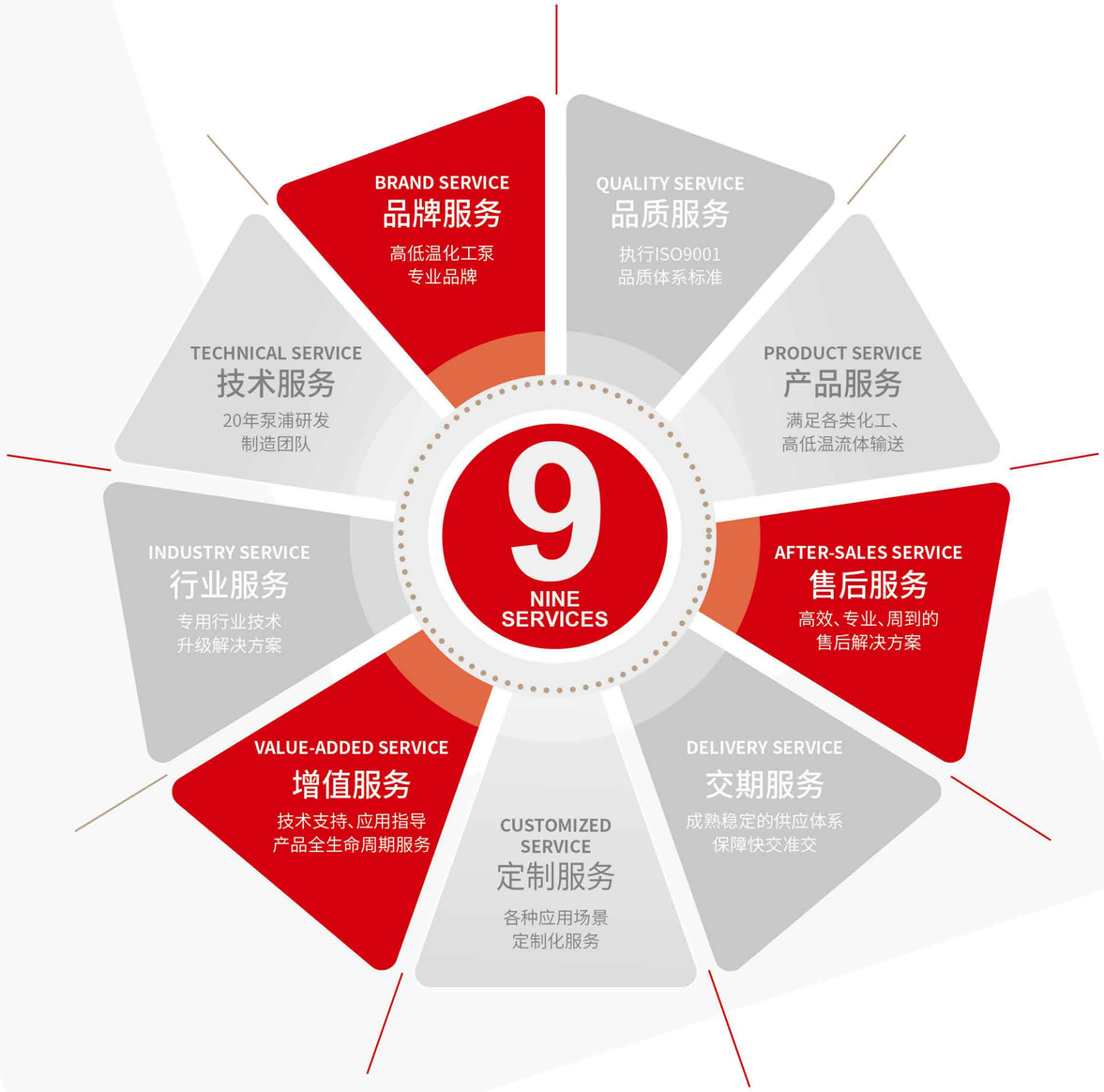

☆ 本公司保留技术更改的权利，如有修改恕不另行通知。The company reserves the right to change the technology, if there is any change without notice

SPECIAL TAILOR-MADE
特殊定制

IE4超高效 IE4 is super efficient | 变频 Frequency conversion | OEM定制 OEM customization | 同步永磁(IE5) Synchronous permanent magnet (IE5) | 参数、材质 Parameters and materials

TEN TECHNOLOGIES
十大技术

01
同步永磁技术
Synchronous Permanent Magnet Technology

02
高承压结构技术
High Pressure Structure Technology

03
超高温400°C技术
Ultra High Temperature 400°C Technology

04
-196°C超低温深冷技术
-196°C Ultra-Low Temperature Cryogenic Technology

10
TEN TECHNOLOGIES
十大技术

05
多频高效技术
Multi-Frequency Efficient Technology

06
屏蔽旋涡技术
Shielding Vortex Technology

07
可干运转无摩擦技术
Thousands Of Running Frictionless Technology

08
螺旋齿轮技术
Spiral Gear Technology

09
负压强自吸技术
Negative Pressure Self-Priming Technology

10
气液混输技术
Gas Liquid Mixed Transportation Technology

☆ 本公司保留技术更改的权利，如有修改恕不另行通知。The company reserves the right to change the technology, if there is any change without notice

DIRECTORY
目录

磁力驱动旋涡泵
MAGNETIC CENTRIFUGAL PUMP

- **MDH** 不锈钢旋涡磁力泵 STAINLESS STEEL VORTEX MAGNETIC PUMP ---- 01
- **MDS** 不锈钢旋涡磁力泵 STAINLESS STEEL VORTEX MAGNETIC PUMP ---- 03
- **MDP** 永磁屏蔽旋涡磁力泵 PERMANENT MAGNET SHIELDED VORTEX MAGNETIC PUMP ---- 05
- **MDK** 不锈钢旋涡磁力泵 STAINLESS STEEL VORTEX MAGNETIC PUMP ---- 07
- **MDW** 不锈钢旋涡磁力泵 STAINLESS STEEL VORTEX MAGNETIC PUMP ---- 09

磁力驱动离心泵
MAGNETIC CENTRIFUGAL PUMP

- **AMC** 化工标准磁力泵 CHEMICAL STANDARD MAGNETIC PUMP ---- 11
- **AMC-F** 化工标准衬氟磁力泵 CHEMICAL STANDARD FLUORINE LINED MAGNETIC PUMP ---- 13
- **LMZ** 轻型离心磁力泵 LIGHTWEIGHT CENTRIFUGAL MAGNETIC PUMP ---- 15

机械轴封旋涡泵
MECHANICAL SEAL VORTEX PUMP

- **WH** 不锈钢旋涡泵 STAINLESS STEEL VORTEX PUMP ---- 17
- **WK** 高扬程旋涡泵 HIGH LIFT VORTEX PUMP ---- 19
- **WD** 黄铜/不锈钢旋涡泵 COPPER / STAINLESS STEEL VORTEX PUMP ---- 21
- **WD-W** 黄铜/不锈钢旋涡泵 COPPER / STAINLESS STEEL VORTEX PUMP ---- 23
- **WL** 立式旋涡泵 VERTICAL VORTEX PUMP ---- 25
- **WM** 不锈钢/铸铁旋涡泵 STAINLESS STEEL /CASTING IRON VORTEX PUMP ---- 27

机械轴封离心泵
MECHANICAL SEAL CENTRIFUGAL PUMP

- **RGP** 大流量离心泵 LARGE FLOW CENTRIFUGAL PUMP ---- 29
- **RGZ** 铸铁/不锈钢离心泵 CASTING IRON / STAINLESS STEEL CENTRIFUGAL PUMP ---- 31
- **CPS(L)** 不锈钢离心泵 STAINLESS STEEL CENTRIFUGAL PUMP ---- 33
- **ISW** 卧式清水离心泵 HORIZONTAL CENTRIFUGAL PUMP ---- 35
- **WRY-H** 联轴式高温热油泵 COUPLED HIGH TEMPERATURE OIL PUMP ---- 37

屏蔽/轴封叶片泵
SHIELDED BLADE/MECHANICAL SEAL VANE PUMP

- **(P)VP** 高压叶片泵 HIGH PRESSURE VANE PUMP ---- 39

磁力/屏蔽/轴封齿轮泵
MAGNETIC/SHIELDED BLADE/ MECHANICAL SEAL GEAR PUMP

- **MDC-X** 中大型磁力齿轮泵 MEDIUM AND LARGE MAGNETIC GEAR PUMP ---- 41
- **MDC-M** 小微型磁力齿轮泵 SMALL MICRO MAGNETIC GEAR PUMP ---- 43

技术支持与售后服务
TECHNICAL SUPPORT AND AFTER-SALES SERVICE ---- 45

新材料/新技术
NEW MATERIALS/NEW TECHNOLOGIES ---- 46

行业应用
INDUSTRY APPLICATIONS ---- 47

应用案例
APPLICATION CASE ---- 48

☆ 本公司保留技术更改的权利，如有修改恕不另行通知。The company reserves the right to change the technology, if there is any change without notice

耐腐蚀 耐高温+400°C 耐低温-196°C 体积小 不锈钢316 低噪音 振动小 安全可靠 气液混合

MDH
STAINLESS STEEL VORTEX MAGNETIC PUMP
不锈钢旋涡磁力泵

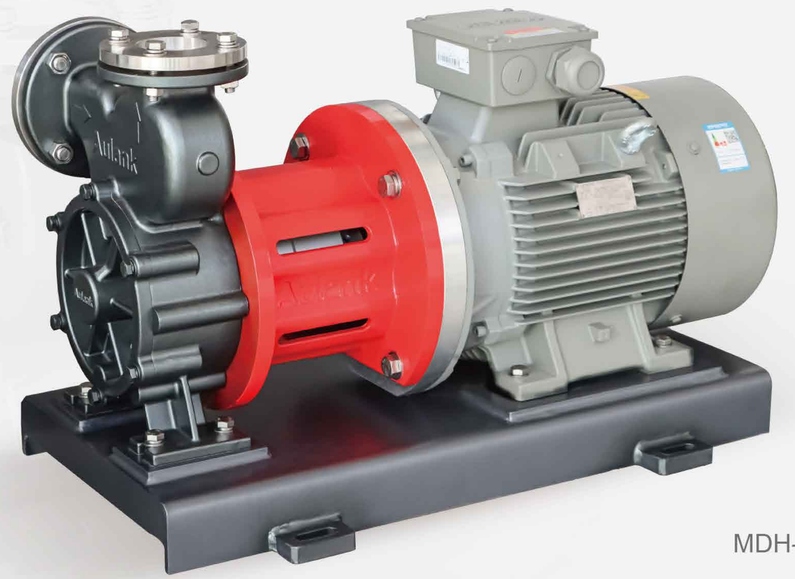

MDH-150

产品特性

- 独创的叶轮无磨损技术
- 独特的气液混输技术
- 承载系统稳定技术
- 超高温磁路驱动技术
- 中温蜡精密铸造及多道表面处理工艺技术

FEATURES

- The original impeller wear free technology
- Unique gas-liquid mixed delivery technology
- Carrying system stabilization technology
- Ultra-high temperature magnetic drive technology
- Medium temperature wax precision casting and multipass surface treatment

应用领域

高温模具控温、高低温试验仪器、半导体精密控温、化工设备、模板控温、超声波清洗设备、高端印染设备、负压精馏、计量输送撬装、TCU控温系统、制氢机、臭氧发生器等。

APPLICATION AREA

High temperature mold temperature control,high and low temperature test instruments, semiconductor precision temperature control,chemical equipment,template temperature control,ultrasonic cleaning equipment,high-end printing and dyeing equipment,negative pressure distillation,metering and conveying skid,TCU temperature control system, hydrogen generator,ozone generator,etc.

使用条件 / Working Condition

介质温度 Medium Temperature	介质比重 Medium Density	环境温度 Ambient Temperature	最高海拔 Maximum Elevation	最大承压 Max withstand pressure
-196°C～+400°C	0.6～2.0	-50°C～+70°C	5000m	40bar

规格性能参数 / Technical Parameter

型号/Model	口径/Diameter		电机/Motor					性能参数/Performance Parameter		泵浦自重 Pump Weight (kg)
	进口 Inlet	出口 Outlet	功率 Power (kW)	匹数 (Hp)	电压 Voltage (V)	频率 Frequency (Hz)	转速 Speed (r/min)	最高/额定扬程 Max/Rated Head (m)	最大流量 Max Capacity (m^3/h)	
MDH-05	DN20	DN15	0.37	0.5	3Ø-380	50	2760	50/30	2.1	11
MDH-07	DN20	DN15	0.5	0.7	3Ø-380	50	2760	80/50	2.7	12
MDH-10	DN25	DN20	0.75	1	3Ø-380	50	2760	55/35	3	16
MDH-15	DN25	DN20	1.1	1.5	3Ø-380	50	2760	80/55	3.9	18.5
MDH-20	DN40	DN32	1.5	2	3Ø-380	50	2760	90/60	5.4	26
MDH-30	DN40	DN32	2.2	3	3Ø-380	50	2760	100/70	7.2	29
MDH-40	DN40	DN32	3	4	3Ø-380	50	2900	120/80	9.6	37
MDH-50	DN50	DN40	4	5.5	3Ø-380	50	2900	62/40	11.7	67
MDH-75	DN50	DN40	5.5	7.5	3Ø-380	50	2900	65/50	13.5	69
MDH-75Z	DN50	DN40	5.5	7.5	3Ø-380	50	1470	74/50	9.8	78
MDH-100	DN65	DN50	7.5	10	3Ø-380	50	1470	80/50	24.9	193
MDH-150	DN65	DN50	11	15	3Ø-380	50	1470	100/60	32	229
MDH-200	DN80	DN65	15	20	3Ø-380	50	1470	80/38	44	332
MDH-250	DN80	DN65	18.5	25	3Ø-380	50	1470	100/40	60	352
MDH-300	DN80	DN65	22	30	3Ø-380	50	1470	120/50	69.8	361

*上述性能参数对应于水在20°C时以正常速度运输，性能及参数误差±10%。泵的性能随输送流体介质的比重及密度的不同而产生变化。
*The above characteristic testing is based on the water transferring with the normal speed under 20 degree. character'serror is about 10%. The pump characters change according to the difference of the liquid mediums' proportion and density.

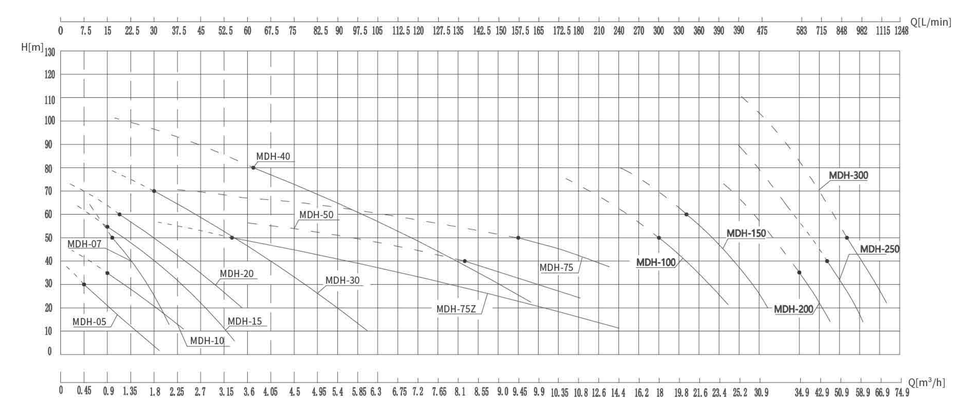

1. 泵盖 Pump Cover
2. 轴芯 Spindle
3. 叶轮 Impeller
4. 泵体 Pump Body
5. 迫紧环 Packing Ring
6. 轴套 Axle Sleeve
7. 内磁体 Inside Magnet
8. 隔离套 Isolation Cover
9. 外磁体 Outside Magnet
10. 电机 Motor

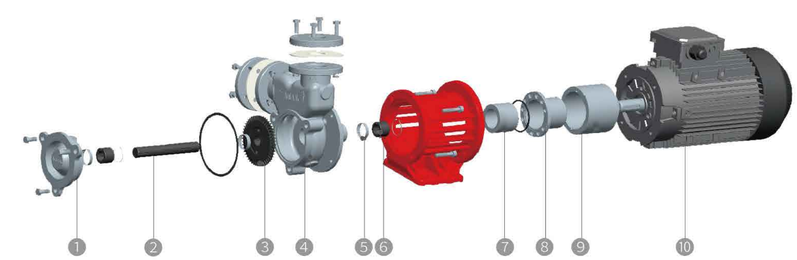

☆ 本公司保留技术更改的权利，如有修改恕不另行通知。The company reserves the right to change the technology, if there is any change without notice

耐腐蚀 耐高温+400°C 耐低温-196°C 体积小 不锈钢316 低噪音 振动小 安全可靠

MDS

STAINLESS STEEL VORTEX MAGNETIC PUMP

不锈钢旋涡磁力泵

MDS-20

产品特性

- 泵体采用高耐磨的D型处理工艺
- 中温蜡精密铸造及多道表面处理工艺技术
- 经氦检的高压密封技术

FEATURES

- The pump body with a high wear-resistant D-type treatment process
- Medium temperature wax precision casting and multi pass surface treatment technology
- High pressure sealing technology with helium testing

应用领域

半导体精密控温、光学镜片精密控温、高低温实验设备、微通道反应器、超声波清洗设备等。

APPLICATION AREA

Precise temperature control of semiconductors,precise temperature control of optical lenses, high and low temperature experimental equipment, micro-channel reactors, ultrasonic cleaning equipment,etc.

使用条件 / Working Condition

介质温度 Medium Temperature	介质比重 Medium Density	环境温度 Ambient Temperature	最高海拔 Maximum Elevation	最大承压 Max withstand pressure
-196°C～+400°C	0.6～2.0	-50°C～+70°C	5000m	70bar

规格性能参数 / Technical Parameter

型号/Model	口径/Diameter		电机/Motor					性能参数/Performance Parameter		泵浦自重 Pump Weight (kg)
	进口 Inlet	出口 Outlet	功率 Power (kW)	匹数 (Hp)	电压 Voltage (V)	频率 Frequency (Hz)	转速 Speed (r/min)	最高扬程 Max Head (m)	最大流量 Max Capacity (L/min)	
MDS-15	G1/2"	G1/2"	1.1	1.5	3Φ-380	50	2760	55	35	13.5
MDS-20	G3/4"	G3/4"	1.5	2	3Φ-380	50	2760	70	60	22
MDS-30	G3/4"	G3/4"	2.2	3	3Φ-380	50	2760	90	60	26

★上述性能参数对应于水在20°C时以正常速度运输，性能及参数误差±10%。泵的性能随输送流体介质的比重及密度的不同而产生变化。
The above characteristic testing is based on the water transferring with the normal speed under 20 degree. character'serror is about 10%. The pump characters change according to the difference of the liquid mediums' proportion and density.

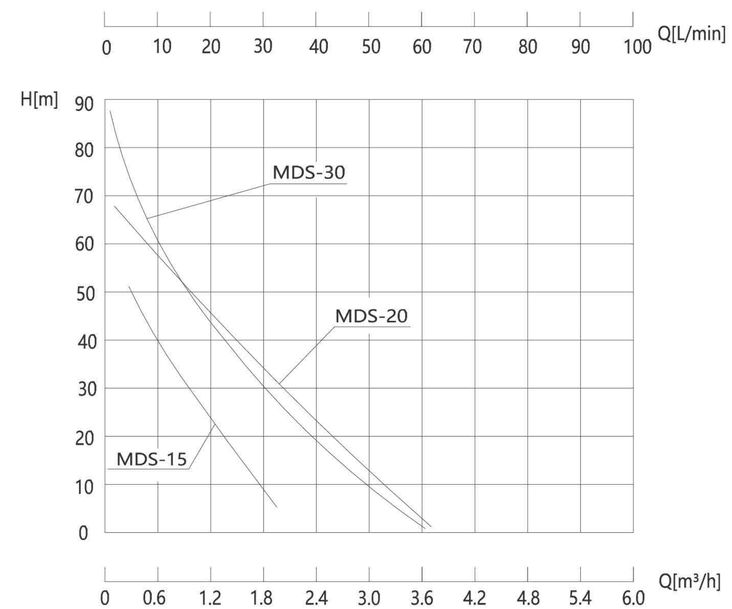

1. 泵盖 Pump Cover
2. 轴芯 Spindle
3. 叶轮 Impeller
4. 泵体 Pump Body
5. 轴套 Axle Sleeve
6. 迫紧环 Packing Ring
7. 内磁体 Inside Magnet
8. 隔离套 Isolation Cover
9. 外磁体 Outside Magnet
10. 电机 Motor

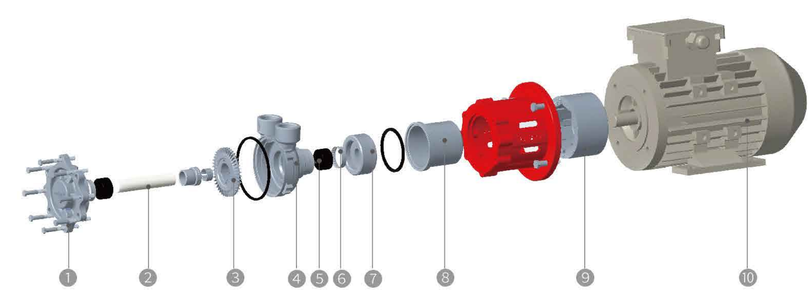

☆ 本公司保留技术更改的权利，如有修改恕不另行通知。The company reserves the right to change the technology, if there is any change without notice

耐腐蚀 耐高温+120°C 耐低温-20°C 体积小 不锈钢316 低噪音 振动小 安全可靠

MDP

PERMANENT MAGNET SHIELDED VORTEX MAGNETIC PUMP

永磁屏蔽旋涡磁力泵

MDP-30

产品特性

- 机泵一体技术
- 永磁同步无级变速技术
- IE5超高能效
- 结构紧凑、体积更小

FEATURES

- Motor and pump body integration technology
- Permanent magnet synchronous continuously variable transmission technology
- IE5 Ultra High Energy Efficiency
- Compact structure and smaller volume

应用领域

半导体精密控温、精密实验设备、医疗设备、制氢机等。

APPLICATION AREA

Semiconductor precision temperature control,precision experimental equipment,medical equipment,hydrogen generator,etc.

使用条件 / Working Condition

高温热水 Thermal Conductivity Wate	高温导热油 Thermal Conductivity Oil	乙二醇/硅油 Glycol/Silicone Oil	环境温度 Ambient Temperature	最高海拔 Maximum Elevation	最大承压 Max withstand pressure
120°C	120°C	-20°C~+120°C	40°C	5000m	20bar

规格性能参数 / Technical Parameter

型号/Model	口径/Diameter		电机/Motor					性能参数/Performance Parameter	
	进口 Inlet	出口 Outlet	功率 Power (kW)	匹数 (Hp)	电压 Voltage (V)	频率 Frequency (Hz)	转速 Speed (r/min)	最高扬程 Max Head (m)	最大流量 Max Capacity (L/min)
MDP-15	G1/2"	G1/2"	1.1	1.5	1ø-220	150-180	1000-4000	87	48
MDP-30	G3/4"	G3/4"	2.2	3.0	1ø-220	150-180	1000-4000	116	74

★上述性能参数对应于水在20°C时以正常速度运输，性能及参数误差±10%。泵的性能随输送流体介质的比重及密度的不同而产生变化。
The above characteristic testing is based on the water transferring with the normal speed under 20 degree. character'serror is about 10%. The pump characters change according to the difference of the liquid mediums' proportion and density.

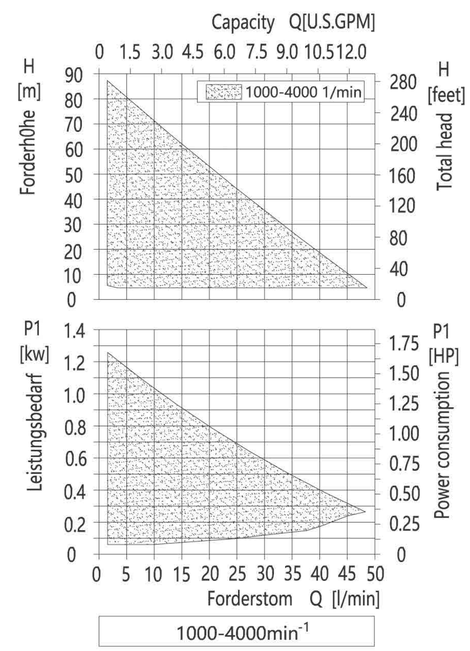

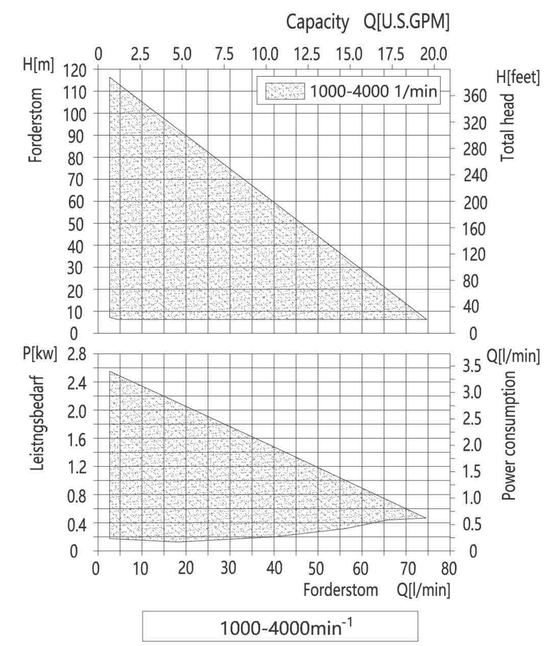

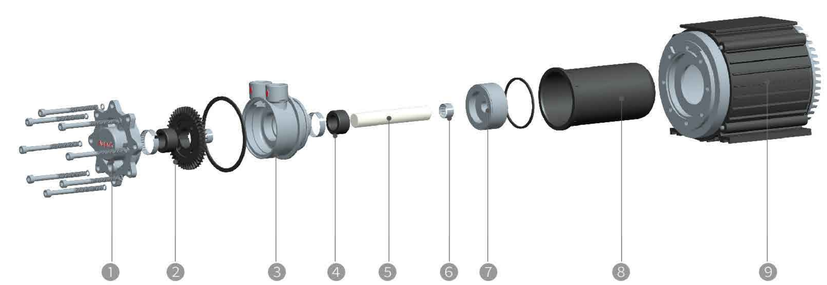

1. 泵盖 Pump Cover
2. 叶轮 Impeller
3. 泵体 Pump Body
4. 轴套 Axle Sleeve
5. 轴芯 Spindle
6. 迫紧环 Packing Ring
7. 内磁体 Inside Magnet
8. 隔离套 Isolation Cover
9. 电机 Motor

☆ 本公司保留技术更改的权利，如有修改恕不另行通知。The company reserves the right to change the technology, if there is any change without notice

耐腐蚀 耐高温+400°C 耐低温-196°C 体积小 不锈钢316 低噪音 振动小 安全可靠

MDK

STAINLESS STEEL VORTEX MAGNETIC PUMP

不锈钢旋涡磁力泵

MDK-20

产品特性

- 中温蜡精密铸造及多道表面处理工艺技术
- 超高压的水力技术
- 无摩擦结构技术

FEATURES

- Medium temperature wax precision casting and multi pass surface treatment technology
- Ultra high pressure hydraulic power technology
- Non friction structure technology

应用领域

半导体精密控温、高低温实验设备、微通道反应器、超声波清洗设备、化工设备、制氢机等。

APPLICATION AREA

Semiconductor precision temperature control,high and low temperature experimental equipment,micro-channel reactor,ultrasonic cleaning equipment,chemical equipment,etc.

使用条件 / Working Condition

介质温度 Medium Temperature	介质比重 Medium Density	环境温度 Ambient Temperature	最高海拔 Maximum Elevation	最大承压 Max withstand pressure
-196°C～+400°C	0.6～2.0	-50°C～+70°C	5000m	40bar

规格性能参数 / Technical Parameter

型号/Model	口径/Diameter		电机/Motor					性能参数/Performance Parameter		泵浦自重 Pump Weight (kg)
	进口 Inlet	出口 Outlet	功率 Power (kW)	匹数 (Hp)	电压 Voltage (V)	频率 Frequency (Hz)	转速 Speed (r/min)	最高/额定扬程 Max/Rated Head (m)	最大流量 Max Capacity (L/min)	
MDK-05	G3/4"	G1/2"	0.37	0.5	3Φ-380	50	2760	100/70	15	11
MDK-10	G3/4"	G1/2"	0.75	1	3Φ-380	50	2760	130/100	20	12
MDK-20	G3/4"	G1/2"	1.5	2	3Φ-380	50	2760	150/110	35	18

★上述性能参数对应于水在20°C时以正常速度运输，性能及参数误差±10%。泵的性能随输送流体介质的比重及密度的不同而产生变化。
The above characteristic testing is based on the water transferring with the normal speed under 20 degree. character'serror is about 10%. The pump characters change according to the difference of the liquid mediums' proportion and density.

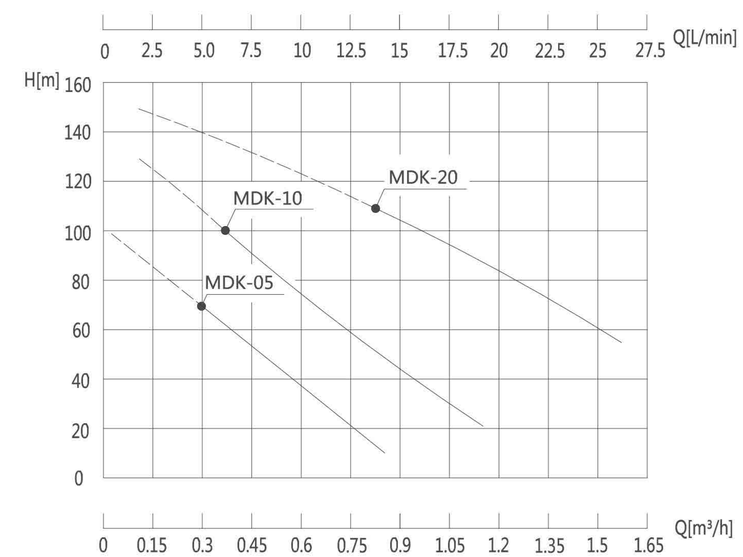

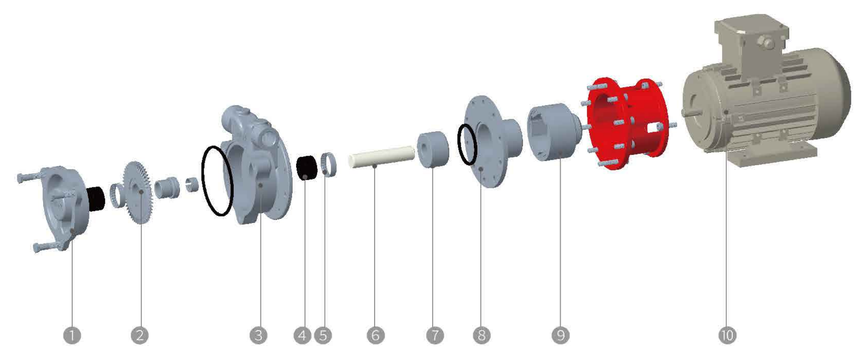

1. 泵盖 Pump Cover
2. 叶轮 Impeller
3. 泵体 Pump Body
4. 轴套 Axle Sleeve
5. 迫紧环 Packing Ring
6. 轴芯 Spindle
7. 内磁体 Inside Magnet
8. 隔离套 Isolation Cover
9. 外磁体 Outside Magnet
10. 电机 Motor

☆ 本公司保留技术更改的权利，如有修改恕不另行通知。The company reserves the right to change the technology, if there is any change without notice

耐腐蚀 耐高温+400°C 耐低温-196°C 体积小 不锈钢316 铸铁 低噪音 振动小 安全可靠

MDW

STAINLESS STEEL VORTEX MAGNETIC PUMP

不锈钢旋涡磁力泵

MDW-15

产品特性

- 叶轮采用高耐磨的P型处理工艺
- 可正向及反向输送
- 耐高压技术，可达7MPa
- 隔离套高强度耐磨技术
- 轴心多种配置，高温、高压

FEATURES

- The impeller with a highly wear-resistant P-type treatment process
- Can be conveyed in both forward and reverse directions
- High pressure resistant technology, up to 7MPa
- Isolation sleeve with high-strength wear-resistant technology
- The axis has multiple configurations, with long service life under high temperature and high pressure

应用领域

高温模具控温、高低温试验仪器、半导体精密控温、化工设备、模板控温、超声波清洗设备、高端印染设备、TCU控温系统等。

APPLICATION AREA

High temperature mold temperature controlling,High and low temperature test instrument,semiconductor precision temperature control.Chemical equipment,template temperature controlling,ultrasonic cleaning equipment,high end printing and dyeing equipment,TCU,etc.

使用条件 / Working Condition

介质温度 Medium Temperature	介质比重 Medium Density	环境温度 Ambient Temperature	最高海拔 Maximum Elevation	最大承压 Max withstand pressure
-196°C～+400°C	0.6～2.0	-50°C～+70°C	5000m	70bar

规格性能参数 / Technical Parameter

型号/Model	口径/Diameter		电机/Motor					性能参数/Performance Parameter		泵浦自重 Pump Weight (kg)
	进口 Inlet	出口 Outlet	功率 Power (kW)	匹数 (Hp)	电压 Voltage (V)	频率 Frequency (Hz)	转速 Speed (r/min)	最高/额定扬程 Max/Rated Head (m)	最大流量 Max Capacity (L/min)	
MDW-024	DN15	DN15	0.18	0.24	3ø-380	50	2760	15/10	15	7.5
MDW-033	DN15	DN15	0.25	0.33	3ø-380	50	2760	20/12	15	9
MDW-05	DN15	DN15	0.37	0.5	3ø-380	50	2760	30/20	30	9.5
MDW-07	DN15	DN15	0.5	0.7	3ø-380	50	2760	40/30	25	10
MDW-07T	G1/2"	G1/2"	0.5	0.7	3ø-380	50	2760	50/40	40	10
MDW-10H	DN15	DN15	0.75	1	3ø-380	50	2760	75/50	30	10
MDW-10 (T)	DN20	DN20	0.75	1	3ø-380	50	2760	45/30	45	10
MDW-15 (T)	DN20	DN20	1.1	1.5	3ø-380	50	2760	60/40	60	17
MDW-23 (T)	DN25	DN25	1.7	2.3	3ø-380	50	2760	65/50	90	22
MDW-33 (T)	DN25	DN25	2.5	3.3	3ø-380	50	2760	90/60	90	26
MDW-40	DN25	DN25	3	4	3ø-380	50	2900	100/70	100	35
MDW-50 (E)	DN32	DN32	4	5	3ø-380	50	2900	90/70	200	55
MDW-75E	DN40	DN40	5.5	7.5	3ø-380	50	2900	220/130	106	60

*上述性能参数对应于水在20°C时以正常速度运输，性能及参数误差±10%。泵的性能随输送流体介质的比重及密度的不同而产生变化。
*The above characteristic testing is based on the water transferring with the normal speed under 20 degrees. character'serror is about 10%. The pump characters change according to the difference of the liquid mediums' proportion and density.

*T 代表螺纹接口 *E代表不锈钢泵体 *Brass impeller thread inlet /outlet E means stainless steel pump body

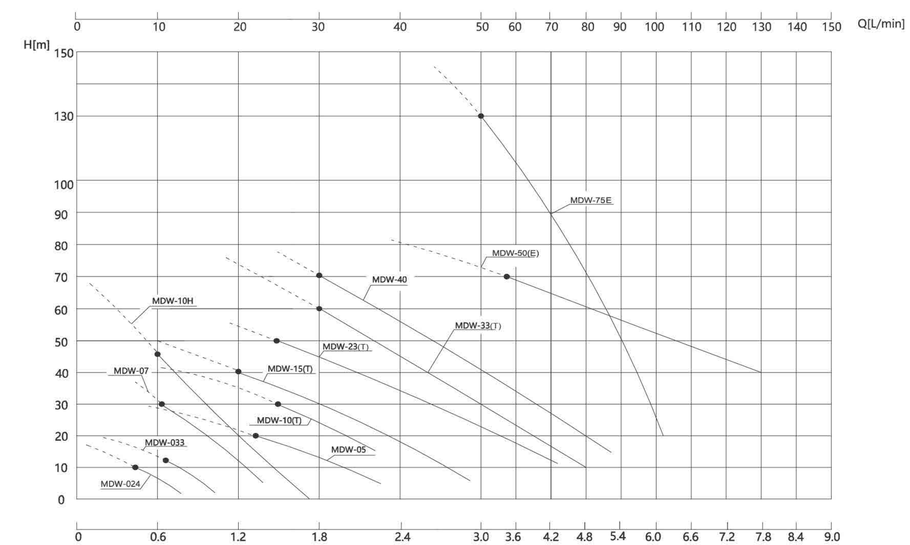

1. 泵盖 Pump Cover
2. 叶轮 Impeller
3. 泵体 Pump Body
4. 迫紧环 Packing Ring
5. 轴套 Axle Sleeve
6. 轴芯 Spindle
7. 内磁体 Inside Magnet
8. 隔离套 Isolation Cover
9. 外磁体 Outside Magnet
10. 电机 Motor

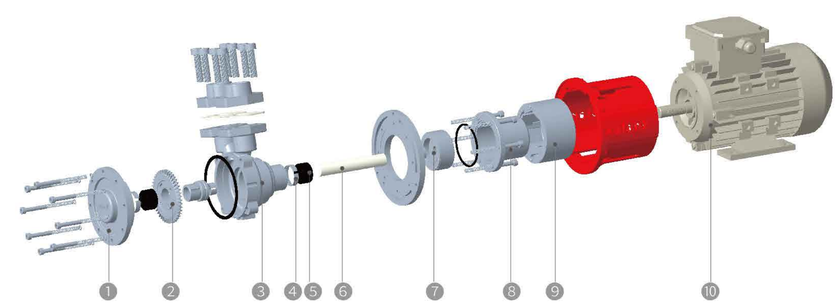

☆ 本公司保留技术更改的权利，如有修改恕不另行通知。The company reserves the right to change the technology, if there is any change without notice

化工标准 大流量 耐腐蚀 耐高温+400°C 耐低温-196°C 不锈钢 低噪音 振动小 安全可靠

AMC

CHEMICAL STANDARD MAGNETIC PUMP

化工标准磁力泵

AMC65-40-250 Ex

产品特性

- 轴向力自动平衡技术
- 承载系统稳定技术
- 超高温磁路驱动技术
- 高效水力节能技术
- 中温蜡精铸造及多道表面处理工艺技术

FEATURES

- Axial force automatic balancing technology
- Stability technology for load-bearing systems
- Ultra high temperature magnetic circuit drive technology
- Efficient hydraulic energy-saving technology
- Medium temperature wax precision casting and multi pass surface treatment technology

应用领域

石油化工、医药中间体、原料药及中药提取剂、化工助剂等精细化工领域，危废处理、水处理等。

APPLICATION AREA

Fine chemical fields such as petrochemicals,pharmaceutical intermediates,raw materials and chinese medicine extractants,chemical additives,and environmental protection fields such as hazardous waste treatment and water treatment,etc.

1. 泵体 Pump Body
2. 叶轮Impeller
3. 内磁体 Inside Magnet
4. 隔离套 Isolation Cover
5. 外磁体 Outside Magnet
6. 电机 Motor

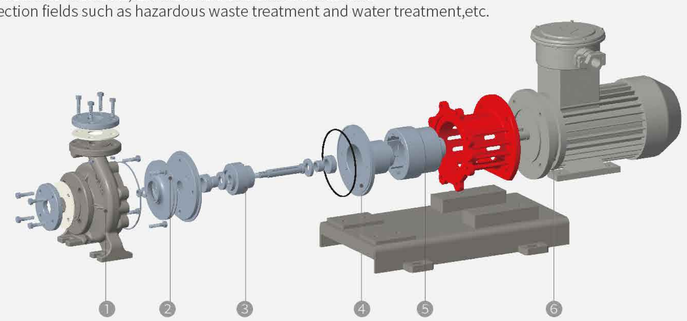

使用条件 / Working Condition

介质温度 Medium Temperature	介质比重 Medium Density	环境温度 Ambient Temperature	最高海拔 Maximum Elevation	最大承压 Max withstand pressure
-196°C～+400°C	0.6～2.0	-50°C～+70°C	5000m	40bar

规格性能参数 / Technical Parameter

型号/Model	口径/Diameter		电机/Motor					性能参数/Performance Parameter		水力效率 Efficiency (%)
	进口 Inlet	出口 Outlet	功率 Power (kW)	匹数 (Hp)	电压 Voltage (V)	频率 Frequency (Hz)	转速 Speed (r/min)	额定扬程 Rated Head (m)	额定流量 Rated Capacity (m^3/h)	
AMC32-25-125A	DN32	DN25	1.5	2	3ø-380	50	2760	20	3.2	42
AMC50-32-160A	DN50	DN32	2.2	3	3ø-380	50	2760	32	3.2	28
AMC32-25-125	DN32	DN25	1.5	2	3ø-380	50	2760	20	6.3	45
AMC50-32-160	DN50	DN32	2.2	3	3ø-380	50	2760	32	6.3	41
AMC50-40-200A	DN50	DN40	5.5	7.5	3ø-380	50	2900	50	6.3	26
AMC50-32-125	DN50	DN32	3	4	3ø-380	50	2900	20	12.5	52
AMC50-32-160L	DN50	DN32	4	5	3ø-380	50	2900	32	12.5	46
AMC50-40-200	DN50	DN40	7.5	10	3ø-380	50	2900	50	12.5	42
AMC50-32-250A	DN50	DN32	15	20	3ø-380	50	2900	70	12.5	32
AMC50-32-250	DN50	DN32	22	30	3ø-380	50	2900	80	20	40
AMC65-50-125	DN65	DN50	4	5	3ø-380	50	2900	20	25	62
AMC50-40-160	DN50	DN40	7.5	10	3ø-380	50	2900	35	25	59
AMC65-40-200	DN65	DN40	11	15	3ø-380	50	2900	50	25	52
AMC65-40-250A	DN65	DN40	22	30	3ø-380	50	2900	70	30	48
AMC65-40-250	DN65	DN40	30	40	3ø-380	50	2900	80	38	50
AMC80-65-125	DN80	DN65	7.5	10	3ø-380	50	2900	23	50	68
AMC80-65-160A	DN80	DN65	15	20	3ø-380	50	2900	35	50	65
AMC80-65-200A	DN80	DN65	18.5	25	3ø-380	50	2900	50	50	63
AMC100-80-125	DN100	DN80	11	15	3ø-380	50	2900	20	100	73
AMC80-65-160	DN80	DN65	18.5	25	3ø-380	50	2900	32	100	74
AMC80-65-200	DN80	DN65	22	30	3ø-380	50	2900	50	100	73
AMC125-80-160	DN125	DN80	30	40	3ø-380	50	2900	41	120	76
AMC125-80-200	DN125	DN80	37	50	3ø-380	50	2900	50	150	79
AMC125-100-200	DN125	DN100	55	75	3ø-380	50	2900	50	200	80
AMC125-100-250	DN125	DN100	15	20	3ø-380	50	1450	20	170	72
AMC150-150-200	DN150	DN150	55	75	3ø-380	50	2900	30	300	64

*以上参数和型号是常规品，需要其他参数或型号可定制生产。The above parameters and models are conventional products, other parameters or models can be customized production.
*上述性能参数对应于水在20°C时以正常速度运输，性能及参数误差±10%。泵的性能随输送流体介质的比重及密度的不同而产生变化。The above characteristic testing is based on the water transferring with the normal speed under 20 degrees. character'serror is about 10%. The pump characters change according to the difference of the liquid mediums' proportion and density.

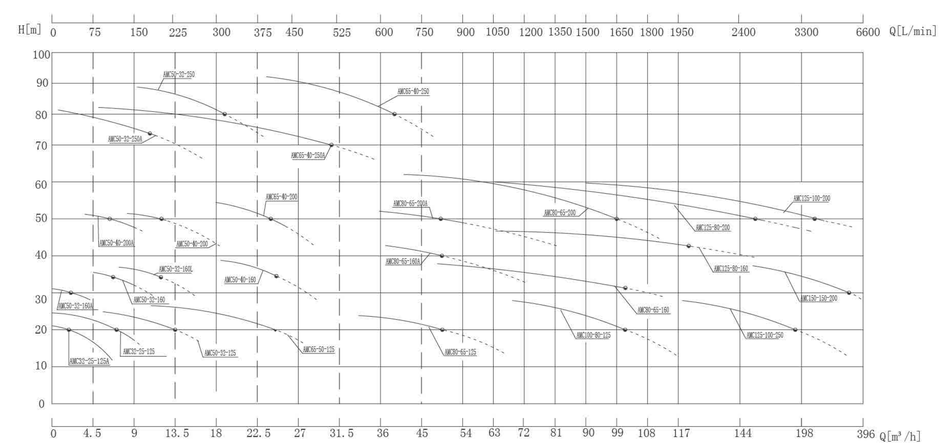

☆ 本公司保留技术更改的权利，如有修改恕不另行通知。The company reserves the right to change the technology, if there is any change without notice

化工标准 大流量 耐腐蚀 耐高温+400℃ 耐低温-196℃ 不锈钢 低噪音 振动小 安全可靠

AMC-F

CHEMICAL STANDARD FLUORINE LINED MAGNETIC PUMP

化工标准衬氟磁力泵

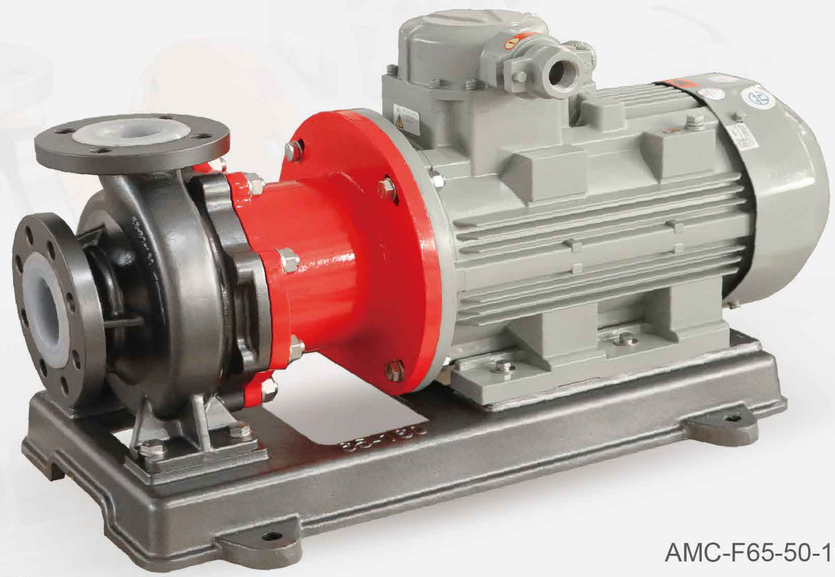

AMC-F65-50-160

产品特性

- 高耐腐蚀性能
- 磁力耦合无发热技术
- 承载系统标配无压碳化硅
- 高效水力节能技术

FEATURES

- High corrosion resistance performance
- Magnetic coupling non heating technology
- The load-bearing system comes standard with pressureless silicon carbide
- Efficient hydraulic energy-saving technology

应用领域

石油化工、制酸制碱、有色金属冶炼、汽车制造的酸洗工艺、稀土分离、农药、染料、医药、造纸、电镀、无线电等。

APPLICATION AREA

Petrochemical, acid and alkali production, non-ferrous metal smelting, acid washing processes in automobile manufacturing, rare earth separation, pesticides, dyes, pharmaceuticals, papermaking, electroplating, radio, etc.

1. 泵体 Pump Body
2. 叶轮Impeller
3. 内磁体 Inside Magnet
4. 轴套 Axle Sleeve
5. 轴芯 Spindle
6. 隔离套 Isolation Cover
7. 外磁体 Outside Magnet
8. 电机 Motor

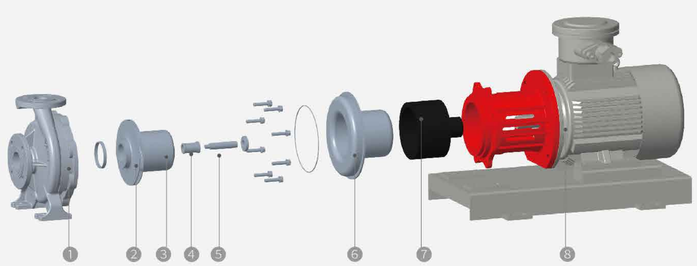

使用条件 / Working Condition

介质温度 Medium Temperature	介质比重 Medium Density	环境温度 Ambient Temperature	最高海拔 Maximum Elevation	最大承压 Max withstand pressure
-20°C～+150°C	0.6～2.0	-50°C～+70°C	5000m	15bar

规格性能参数 / Technical Parameter

型号/Model	口径/Diameter		电机/Motor					性能参数/Performance Parameter	
	进口 Inlet	出口 Outlet	功率 Power (kW)	匹数 (Hp)	电压 Voltage (V)	频率 Frequency (Hz)	转速 Speed (r/min)	额定扬程 Rated Head (m)	额定流量 Rated Capacity (m^3/h)
AMC-F32-20-125	32	20	1.1	1.5	3ø-380	50	2760	20	3.6
AMC-F32-20-160	32	20	2.2	3	3ø-380	50	2760	32	3.6
AMC-F40-25-125	40	25	1.5	3	3ø-380	50	2760	20	6.3
AMC-F40-25-160	40	25	3	4	3ø-380	50	2760	32	6.3
AMC-F40-25-200	40	25	5.5	7.5	3ø-380	50	2900	50	6.3
AMC-F50-32-125	50	32	2.2	3	3ø-380	50	2900	20	12.5
AMC-F50-32-160	50	32	4	5	3ø-380	50	2900	32	12.5
AMC-F50-32-200	50	32	7.5	10	3ø-380	50	2900	50	12.5
AMC-F50-32-250	50	32	11	15	3ø-380	50	2900	80	12.5
AMC-F65-50-125	65	50	3	4	3ø-380	50	2900	20	25
AMC-F65-50-160	65	50	5.5	7.5	3ø-380	50	2900	32	25
AMC-F65-40-200	65	40	11	15	3ø-380	50	2900	50	25
AMC-F65-40-250	65	40	18.5	25	3ø-380	50	2900	80	25
AMC-F80-65-125	80	65	7.5	10	3ø-380	50	2900	20	50
AMC-F80-65-160	80	65	11	15	3ø-380	50	2900	32	50
AMC-F80-65-200	80	50	18.5	25	3ø-380	50	2900	50	50
AMC-F80-65-250	80	50	30	40	3ø-380	50	2900	80	50
AMC-F100-80-125	100	80	11	15	3ø-380	50	2900	20	100
AMC-F100-80-160	100	80	18.5	25	3ø-380	50	2900	32	100
AMC-F100-80-200	100	80	30	40	3ø-380	50	2900	40	100

*上述性能参数对应于水在20°C时以正常速度运输，性能及参数误差±10%。泵的性能随输送流体介质的比重及密度的不同而产生变化。
*The above characteristic testing is based on the water transferring with the normal speed under 20 degrees. character'serror is about 10%. The pump characters change according to the difference of the liquid mediums' proportion and density.

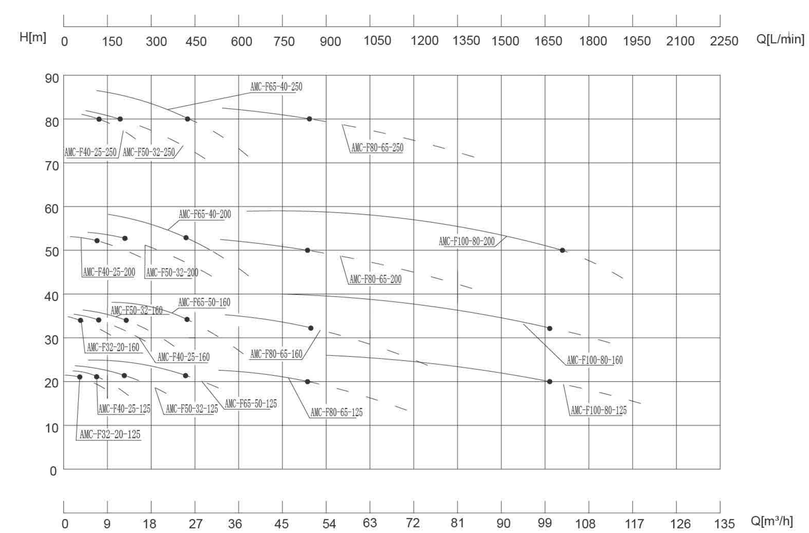

☆ 本公司保留技术更改的权利，如有修改恕不另行通知。The company reserves the right to change the technology, if there is any change without notice

耐腐蚀 耐高温+400°C 耐低温-196°C 体积小 不锈钢 低噪音 振动小 安全可靠

LMZ
LIGHTWEIGHT CENTRIFUGAL MAGNETIC PUMP
轻型离心磁力泵

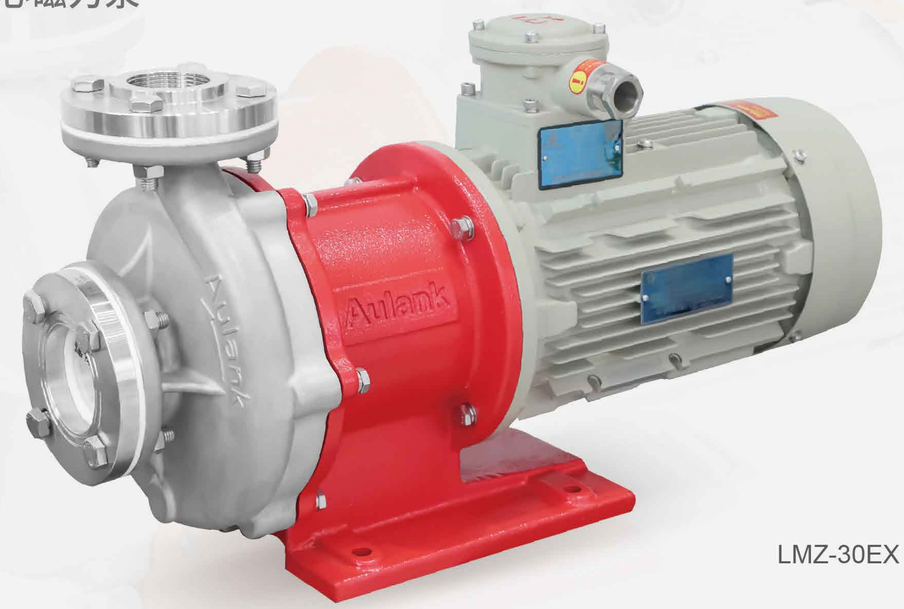

LMZ-30EX

产品特性

- 中温蜡精密铸造及多道表面处理工艺技术
- 全封闭铸铁支架
- 泵壳承重、承压强
- 铝壳防爆电机
- B5 电机悬空安装

FEATURES

- Medium temperature wax precision casting and multi pass surface treatment technology
- Fully enclosed cast iron bracket
- Pump cover load-bearing and pressure bearing strength
- Aluminum shell explosion-proof motor
- B5 motor suspended installation

应用领域

高温模具控温、高低温试验仪器、半导体精密控温、化工设备、模板控温、超声波清洗设备、高端印染设备、负压精馏、计量输送撬装、TCU控温系统、制氢机、臭氧发生器等。

APPLICATION AREA

High temperature mod temperature control,high and low temperature test instruments,semiconductor precision temperature control,chemical equipment,template temperature control,ultrasonic cleaning equipment,high-end printing and dyeing equipment,negative pressure distillation,metering and conveying skid,TCU temperature control system,hydrogen generator,ozone generator,etc.

使用条件 / Working Condition

介质温度 Medium Temperature	介质比重 Medium Density	环境温度 Ambient Temperature	最高海拔 Maximum Elevation	最大承压 Max withstand pressure
-196°C～+400°C	0.6～2.0	-50°C～+70°C	5000m	30bar

规格性能参数 / Technical Parameter

型号/Model	口径/Diameter		电机/Motor					性能参数/Performance Parameter		泵浦自重 Pump Weight (kg)
	进口 Inlet	出口 Outlet	功率 Power (kW)	匹数 (Hp)	电压 Voltage (V)	频率 Frequency (Hz)	转速 Speed (r/min)	额定扬程 Rated Head (m)	额定流量 Rated Capacity (m^3/h)	
LMZ-10	DN32	DN25	0.75	1	3Ø-380	50	2760	15	4	28
LMZ-20	DN32	DN25	1.5	2	3Ø-380	50	2760	18	6	30
LMZ-30	DN50	DN32	2.2	3	3Ø-380	50	2760	22	6.3	42
LMZ-40	DN50	DN32	3	4	3Ø-380	50	2900	21	9	45
LMZ-50	DN50	DN40	4	5	3Ø-380	50	2900	25	25	60
LMZ-60	DN50	DN40	4.5	6	3Ø-380	50	2900	30	25	65
LMZ-75	DN50	DN40	5.5	7.5	3Ø-380	50	2900	35	25	87

*上述性能参数对应于水在20°C时以正常速度运输，性能及参数误差±10%。泵的性能随输送流体介质的比重及密度的不同而产生变化。

*The above characteristic testing is based on the water transferring with the normal speed under 20 degrees. character'serror is about 10%. The pump characters change according to the difference of the liquid mediums' proportion and density.

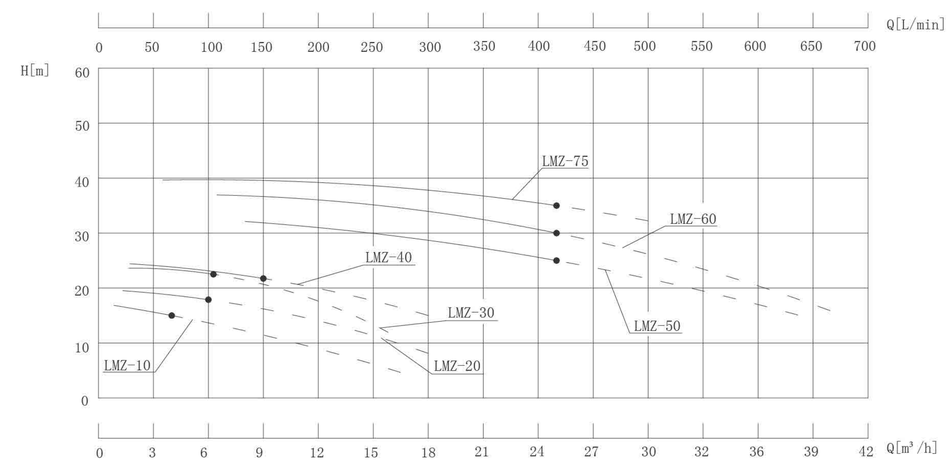

❶ 泵体 Pump Body
❷ 叶轮 Impeller
❸ 内磁体 Inside Magnet
❹ 隔离套 Isolation Cover
❺ 外磁体 Outside Magnet
❻ 电机 Motor

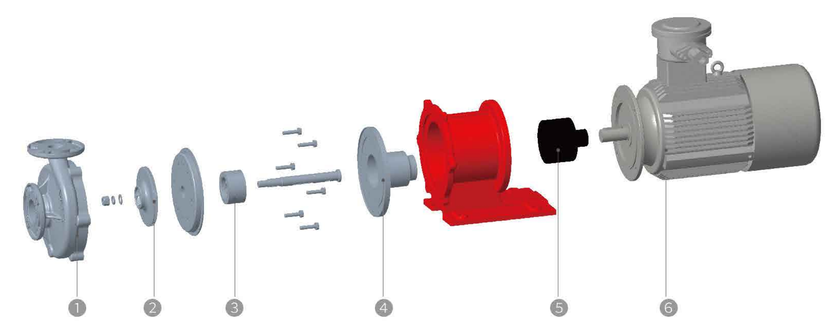

☆ 本公司保留技术更改的权利，如有修改恕不另行通知。The company reserves the right to change the technology, if there is any change without notice

高压力 耐高温 耐低温 耐腐蚀 体积小 不锈钢 低噪音 振动小 安全可靠 气液混合

WH
STAINLESS STEEL
VORTEX PUMP
不锈钢旋涡泵

WH-33

产品特性

- 气液混合
- 可自吸
- 耐腐蚀

FEATURES

- Gas-liquid mixture
- Self priming
- Corrosion resistance

应用领域

模具控温、锅炉补水、超声波清洗、食品机械、臭氧发生器、高低温检测等。

APPLICATION AREA

Mold temperature controlling unite,boiler feed water,ultrasonic cleaning,food machine,ozone generator,high and low temperature detection,etc.

使用条件 / Working Condition

高温热水 Thermal Conductivity Water	高温导热油 Thermal Conductivity Oil	乙二醇/硅油 Glycol/Silicone Oil	工作环境温度 Working Temperature	最高海拔 Maximum Elevation	最大承压 Max withstand pressure
+5°C~+160°C	+5°C~+200°C	-30°C~+180°C	-5°C~+40°C	1000m	10bar

规格性能参数 / Technical Parameter

型号/Model	口径/Diameter		电机/Motor					性能参数/Performance Parameter		泵浦自重 Pump Weight (kg)
	进口 Inlet	出口 Outlet	功率 Power (kW)	匹数 (Hp)	电压 Voltage (V)	频率 Frequency (Hz)	转速 Speed (r/min)	最高/额定扬程 Max/Rated Head (m)	最大流量 Max Capacity (L/min)	
WH-05	G3/4”	G1/2”	0.37	0.5	3ø-380	50	2760	60/45	40	8
WH-07	G3/4”	G1/2”	0.55	0.7	3ø-380	50	2760	80/50	45	10
WH-15	G1”	G3/4”	1.1	1.5	3ø-380	50	2760	80/55	65	15.5
WH-23	G1-1/4”	G1”	1.7	2.3	3ø-380	50	2760	100/60	120	20
WH-33	G1-1/2”	G1-1/4”	2.5	3.3	3ø-380	50	2760	120/70	160	25.5
WH-50	G2”	G1-1/2”	4	5	3ø-380	50	2760	70/50	220	40
WH-75	G2”	G1-1/2”	5.5	7.5	3ø-380	50	2760	80/60	250	42
WH-100	DN65	DN50	7.5	10	3ø-380	50	1470	70/50	483	138
WH-150	DN65	DN50	11	15	3ø-380	50	1470	85/60	533	150

*上述性能参数对应于水在20°C时以正常速度运输，性能及参数误差±10%。泵的性能随输送流体介质的比重及密度的不同而产生变化。

*The above characteristic testing is based on the water transferring with the normal speed under 20 degrees. character'serror is about 10%. The pump characters change according to the difference of the liquid mediums' proportion and density.

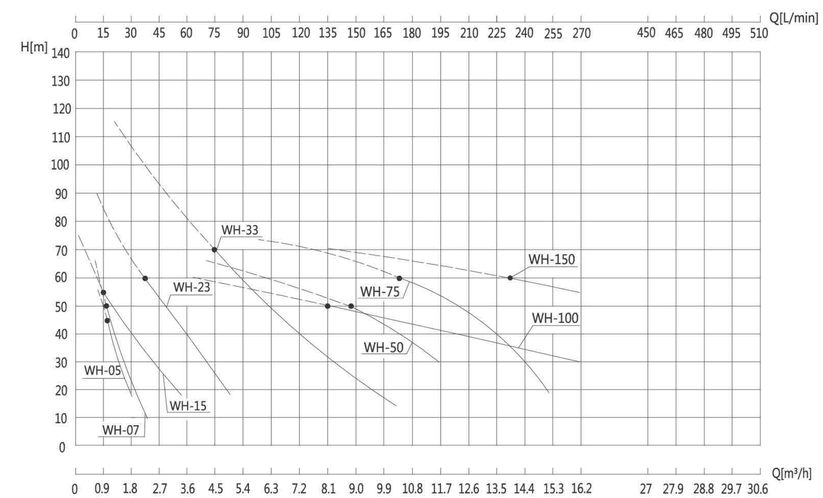

❶ 泵盖 Pump Cover
❷ 叶轮 Impeller
❸ 机械轴封 Mechanical Seal
❹ 泵体 Pump Body
❺ 电机 Motor

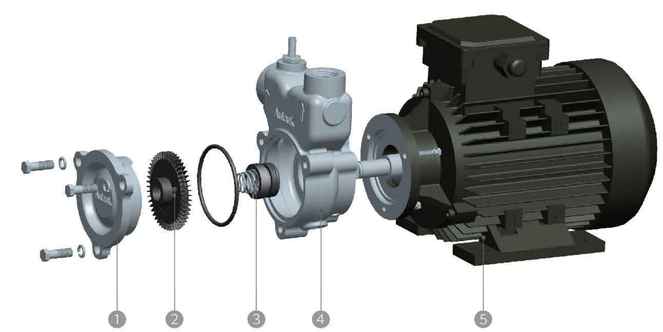

☆ 本公司保留技术更改的权利，如有修改恕不另行通知。The company reserves the right to change the technology, if there is any change without notice

高压力 耐高温 耐低温 耐腐蚀 体积小 不锈钢 低噪音 振动小 安全可靠

WK
HIGH LIFT VORTEX PUMP
高扬程旋涡泵

WK-05

产品特性

- 高压力
- 无摩擦结构
- 耐腐蚀

FEATURES

- High pressure
- Frictionless structure
- Corrosion resistance

应用领域

模具控温、蒸汽发生器、锅炉补水、高压补水等。

APPLICATION AREA

Mold temperature controlling unite,steam generato,boilerwater supply,high pressure water supplyequipmentand otherindustries,etc.

使用条件 / Working Condition

高温热水 Thermal Conductivity Water	高温导热油 Thermal Conductivity Oil	乙二醇/硅油 Glycol/Silicone Oil	工作环境温度 Working Temperature	最高海拔 Maximum Elevation	最大承压 Max withstand pressure
+5°C~+160°C	+5°C~+200°C	-30°C~+180°C	-5°C~+40°C	1000m	15bar

规格性能参数 / Technical Parameter

型号/Model	口径/Diameter		电机/Motor					性能参数/Performance Parameter		泵浦自重 Pump Weight (kg)
	进口 Inlet	出口 Outlet	功率 Power (kW)	匹数 (Hp)	电压 Voltage (V)	频率 Frequency (Hz)	转速 Speed (r/min)	最高/额定扬程 Max/Rated Head (m)	最大流量 Max Capacity (L/min)	
WK-05 (U)	G3/4"	G1/2"	0.37	0.5	3Ø-380	50	2760	100/70	15	11
WK-10 (U)	G3/4"	G1/2"	0.75	1	3Ø-380	50	2760	130/100	20	12
WK-15 (U)	G3/4"	G1/2"	1.1	1.5	3Ø-380	50	2760	150/110	35	15

*上述性能参数对应于水在20°C时以正常速度运输，性能及参数误差±10%。泵的性能随输送流体介质的比重及密度的不同而产生变化。*The above characteristic testing is based on the water transferring with the normal speed under 20 degrees. character'serror is about 10%. The pump characters change according to the difference of the liquid mediums' proportion and density.

*U代表黄铜叶轮。*The letter "U" means brass impeller.

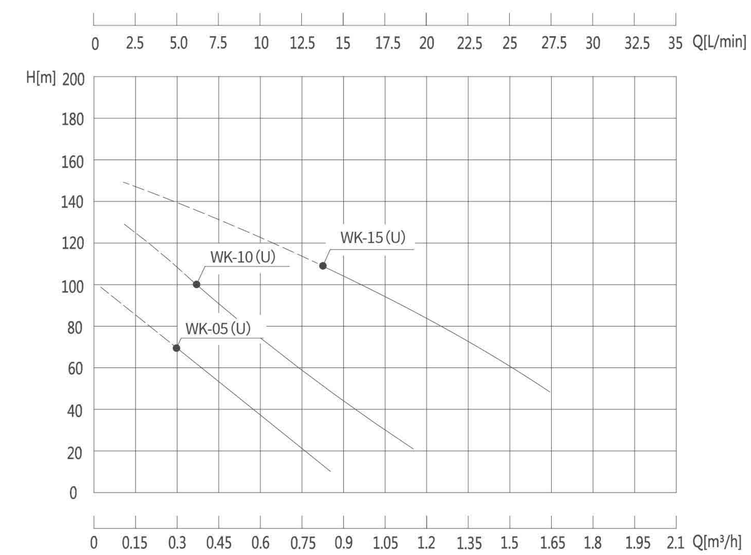

❶ 泵盖 Pump Cover
❷ 叶轮 Impeller
❸ 机械轴封 Mechanical Seal
❹ 轴封座 Shaft Seal Base
❺ 电机 Motor

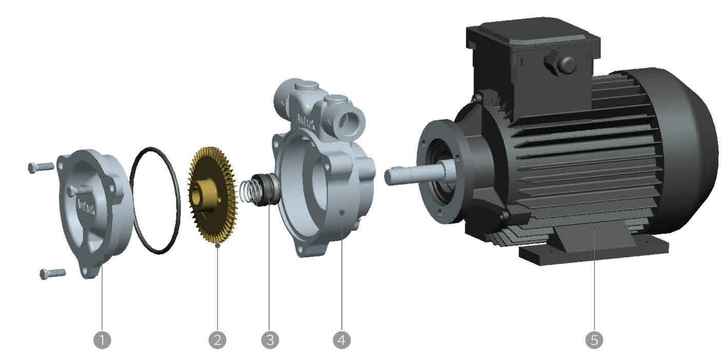

☆ 本公司保留技术更改的权利，如有修改恕不另行通知。The company reserves the right to change the technology, if there is any change without notice

耐高温 耐低温 体积小 铜 不锈钢 低噪音 振动小 性能稳定

WD

COPPER / STAINLESS STEEL VORTEX PUMP

黄铜/不锈钢旋涡泵

WD-50E

产品特性

- 高扬程
- 泵体材质多样化选择
- 密封进口材质
- 进出口连接方式可选择法兰、管牙连接

FEATURES

- High pressure
- Diversified selection of pump body materials
- Sealed imported material
- The import and export connection method can choose flange or pipe tooth connection

应用领域

模具控温、医药灭菌、反应釜夹套控温、蒸汽锅炉、焊机冷却、试验仪器、锅炉补水、热水炉、食品设备等。

APPLICATION AREA

Mold temperature controlling,medical sterilization,reaction kettle,steam generator,welder cooling,testing instrument,boiler feed water,hot water furnace,food equipment,etc.

使用条件 / Working Condition

高温热水 Thermal Conductivity Water	高温导热油 Thermal Conductivity Oil	乙二醇/硅油 Glycol/Silicone Oil	工作环境温度 Working Temperature	最高海拔 Maximum Elevation	最大承压 Max withstand pressure
+5°C~+160°C	+5°C~+200°C	-30°C~+180°C	-5°C~+40°C	1000m	20bar

规格性能参数 / Technical Parameter

型号/Model	口径/Diameter		电机/Motor					性能参数/Performance Parameter		泵浦自重 Pump Weight (kg)
	进口 Inlet	出口 Outlet	功率 Power (kW)	匹数 (Hp)	电压 Voltage (V)	频率 Frequency (Hz)	转速 Speed (r/min)	最高/额定扬程 Max/Rated Head (m)	最大流量 Max Capacity (L/min)	
WD-07(E)	G1/2"	G1/2"	0.55	0.7	3Ø-380	50	2760	40/25	25	6.5
WD-07(E)(S)	G1/2"	G1/2"	0.55	0.7	1Ø-220	50	2760	45/25	30	6.5
WD-10	G3/4"	G3/4"	0.75	1	3Ø-380	50	2760	60/40	60	11
WD-10E	DN20	DN20	0.75	1	3Ø-380	50	2760	60/40	60	11
WD-20N	DN20	DN20	1.5	2	3Ø-380	50	2760	60/35	90	16
WD-20E	G3/4"	G3/4"	1.5	2	3Ø-380	50	2760	60/35	90	15
WD-33	DN25	DN25	2.5	3.3	3Ø-380	50	2760	85/55	108	26
WD-50E	G1-1/4"	G1-1/4"	4	5	3Φ-380	50	2760	220/130	106	40

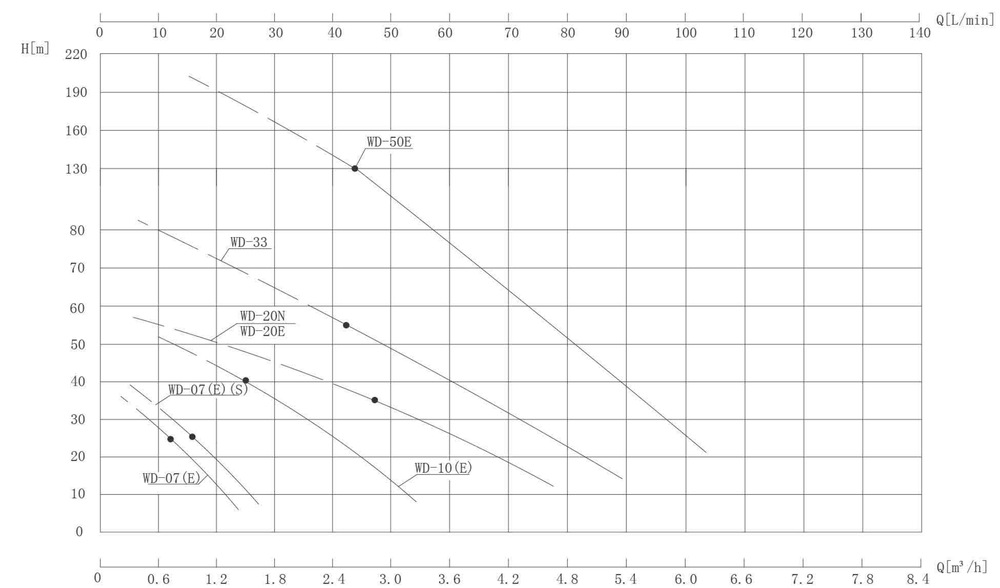

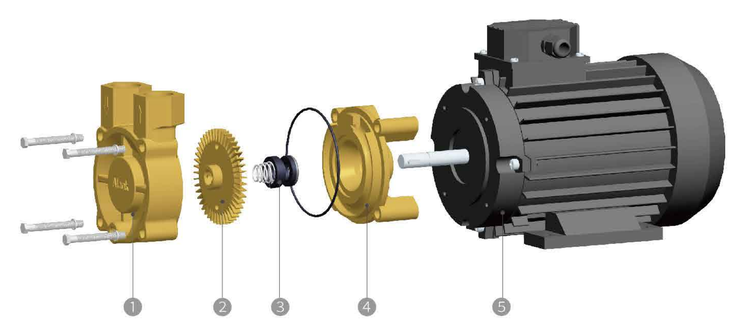

1. 泵盖 Pump Cover
2. 叶轮 Impeller
3. 机械轴封 Mechanical Seal
4. 轴封座 Shaft Seal Base
5. 电机 Motor

磁力驱动旋涡泵 Magnetic Centrifugal Pump
磁力驱动离心泵 Magnetic Centrifugal Pump
机械轴封旋涡泵 Mechanical Seal Vortex Pump
机械轴封离心泵 Mechanical Seal Centrifugal Pump
屏蔽/轴封叶片泵 Shielded/Blade/Mechanical Seal Vane Pump
磁力/屏蔽/轴封齿轮泵 Magnetic/Shielded/Blade/Mechanical Seal Gear Pump

☆ 本公司保留技术更改的权利，如有修改恕不另行通知。The company reserves the right to change the technology, if there is any change without notice

耐高温 耐低温 体积小 铜 不锈钢 低噪音 振动小 性能稳定

WD-W

COPPER / STAINLESS STEEL VORTEX PUMP

黄铜/不锈钢旋涡泵

WD-021W

产品特性

- 泵体材质多样化选择
- 密封进口材质
- 结构紧凑
- 性价比高

FEATURES

- Diversified selection of pump body materials
- Sealed imported material
- Compact structure
- High cost-effectiveness

应用领域

医疗灭菌器、蒸汽发生器、高低温试验仪器、焊机冷却、小型冷却循环系统等。

APPLICATION AREA

Medical sterilization,steam generator, high and low temperature testing instrument,welder cooling,small cooling and circulating system,etc.

使用条件 / Working Condition

高温热水 Thermal Conductivity Water	高温导热油 Thermal Conductivity Oil	乙二醇 Ethylene glycol	工作环境温度 Working Temperature	最高海拔 Maximum Elevation	最大承压 Max withstand pressure
+5°C~+160°C	+5°C~+200°C	-30°C~+180°C	-5°C~+40°C	1000m	10bar

规格性能参数 / Technical Parameter

型号/Model	口径/Diameter		电机/Motor					性能参数/Performance Parameter		泵浦自重 Pump Weight (kg)
	进口 Inlet	出口 Outlet	功率 Power (kW)	匹数 (Hp)	电压 Voltage (V)	频率 Frequency (Hz)	转速 Speed (r/min)	最高/额定扬程 Max/Rated Head (m)	最大流量 Max Capacity (L/min)	
WD-021 (S) (E) (W)	G1/4"	G1/4"	0.16	0.21	3Ø-380 1Ø-220 1Ø-380	50	2760	36/25	10	4
WD-021 (S) (L) (E)	G1/2"	G1/2"	0.16	0.21	3Ø-380 1Ø-220	50	2760	20/12	20	5
WD-033 (E) (S)	G1/2"	G1/2"	0.25	0.33	3Ø-380 1Ø-220	50	2760	25/16	22	6
WD-05W	G1/2"	G1/2"	0.37	0.5	1Ø-220 1Ø-380	50	2760	45/25	25	6.5
WD-05L	G1/2"	G1/2"	0.37	0.5	3Ø-380	50	2760	45/25	25	6.5

*上述性能参数对应于水在20°C时以正常速度运输，性能及参数误差±10%。泵的性能随输送流体介质的比重及密度的不同而产生变化。
*The above characteristic testing is based on the water transferring with the normal speed under 20 degrees. character'serror is about 10%. The pump characters change according to the difference of the liquid mediums' proportion and density.

*E代表不锈钢泵体;S代表单相电源;L代表大流量;W焊机冷却。*The letter "E" means stainless steel pump body; "S" means single phase; "L" means large flow; "W" welder cooling.

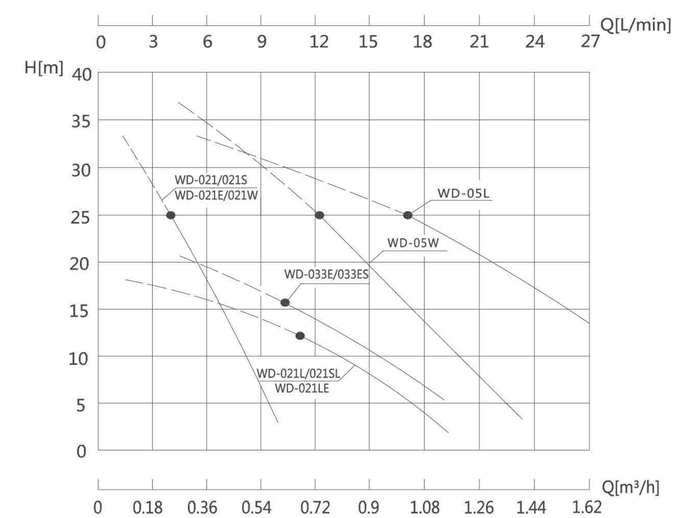

❶ 泵盖 Pump Cover
❷ 叶轮 Impeller
❸ 机械轴封 Mechanical Seal
❹ 轴封座 Shaft Seal Base
❺ 电机 Motor
❻ 风叶 Fan

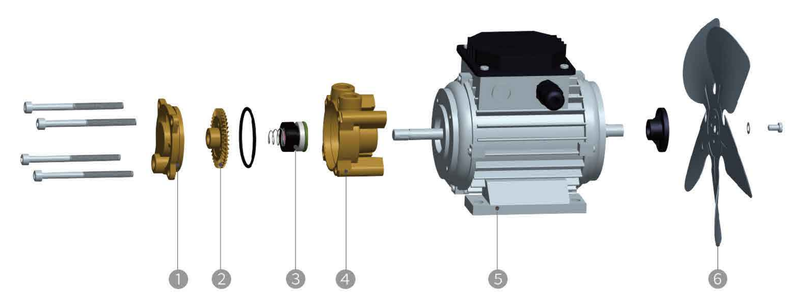

☆ 本公司保留技术更改的权利，如有修改恕不另行通知。The company reserves the right to change the technology, if there is any change without notice

无泄漏 耐高温 耐低温 体积小 铜 不锈钢 低噪音 振动小 性能稳定

WL
VERTICAL VORTEX PUMP
立式旋涡泵

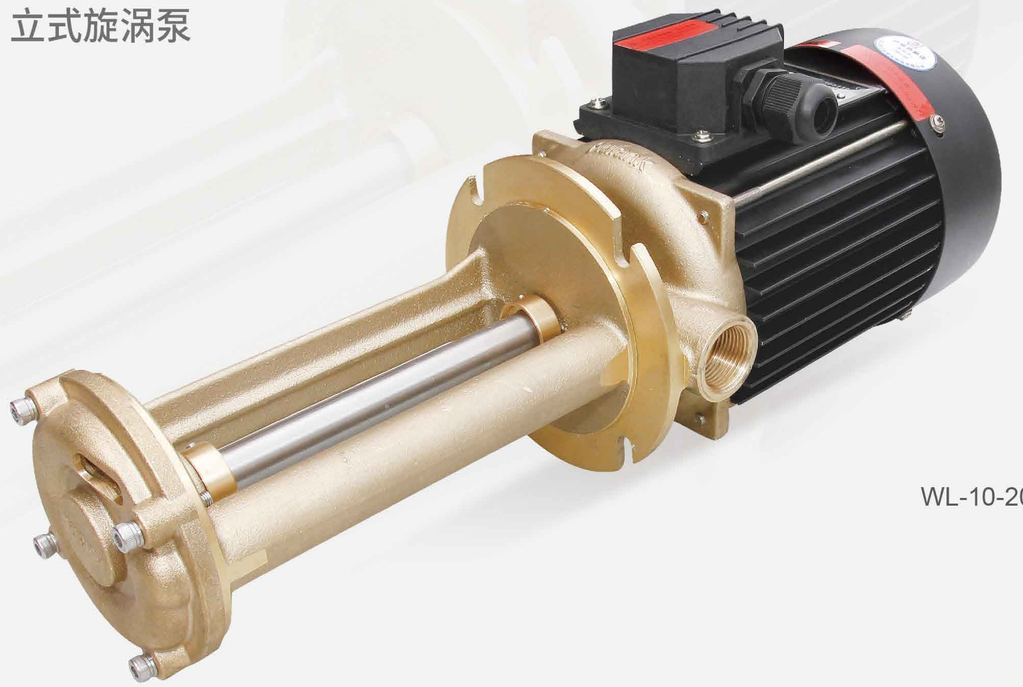

WL-10-200

产品特性

- 无机械密封结构，实现介质安全无泄漏
- 泵体材质多样化选择
- 性能稳定

FEATURES

- No mechanical seal structure, achieving medium safety and no leakage
- Diversified selection of pump body materials
- Stable performance

应用领域

模具控温、料筒保温、机床冷却等。

APPLICATION AREA

Mold temperature controlling,cylinder heat preservation,machine tool cooling,etc.

使用条件 / Working Condition

高温热水 Thermal Conductivity Water	高温导热油 Thermal Conductivity Oil	乙二醇 Ethylene glycol	工作环境温度 Working Temperature	最高海拔 Maximum Elevation	最大承压 Max withstand pressure
+5°C~+95°C	+5°C~+200°C	-30°C~+180°C	-5°C~+40°C	1000m	10bar

规格性能参数 / Technical Parameter

型号/Model	口径/Diameter	电机/Motor					性能参数/Performance Parameter		泵浦自重 Pump Weight (kg)
	出口 Outlet	功率 Power (kW)	匹数 (Hp)	电压 Voltage (V)	频率 Frequency (Hz)	转速 Speed (r/min)	最高/额定扬程 Max/Rated Head (m)	最大流量 Max Capacity (L/min)	
WL-07(S)-150	G3/4"	0.5	0.7	3Ø-380 1Ø-220	50	2760	38/25	38	9
WL-07-200	G3/4"	0.5	0.7	3Ø-380	50	2760	38/25	38	10
WLY-07-200	G1/2"								11
WL-10(S)-150	G3/4"	0.75	1	3Ø-380 1Ø-220	50	2760	60/50	70	11.5
WL-10-200	G3/4"	0.75	1	3Ø-380	50	2760	60/50	70	12
WL-15-150	G3/4"	1.1	1.5	3Ø-380	50	2760	80/60	70	13
WL-15-200	G3/4"	1.1	1.5	3Ø-380	50	2760	80/60	70	13
WL-20E-200	G1"	1.5	2	3Ø-380	50	2760	75/60	90	15

*上述性能参数对应于水在20°C时以正常速度运输，性能及参数误差±10%。泵的性能随输送流体介质的比重及密度的不同而产生变化。
*The above characteristic testing is based on the water transferring with the normal speed under 20 degrees. character'serror is about 10%. The pump characters change according to the difference of the liquid mediums' proportion and density.

*E代表不锈钢泵体;S代表单相电源。 *The letter "E" means stainless steel pump body; "S" means single phase.

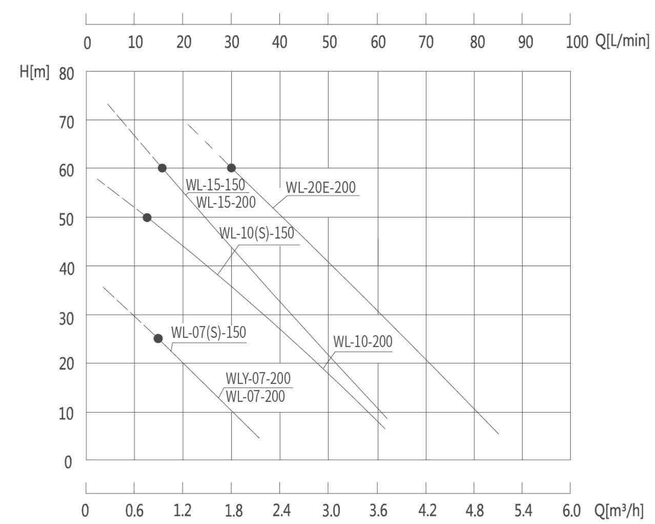

❶ 泵盖 Pump Cover
❷ 叶轮 Impeller
❸ 滑动轴承 Sliding Bearing
❹ 泵体 Pump Body
❺ 电机 Motor

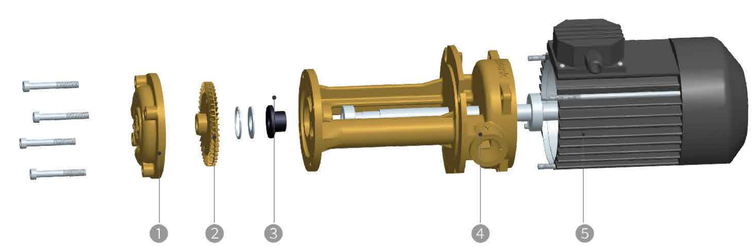

☆ 本公司保留技术更改的权利，如有修改恕不另行通知。The company reserves the right to change the technology, if there is any change without notice

耐高温 耐低温 体积小 铸铁 不锈钢 低噪音 振动小 性能稳定

WM
STAINLESS STEEL /CASTING IRON VORTEX PUMP
不锈钢/铸铁旋涡泵

WM-10

产品特性

- 泵体材质多样化选择
- 密封进口材质
- 性能稳定
- 结构紧凑

FEATURES

- Diversified selection of pump body materials
- Sealed imported material
- Stable performance
- Compact structure

应用领域

模具控温、超声波清洗、试验仪器、机床冷却、料筒控温、冷热交换系统等。

APPLICATION AREA

Mold temperature controlling,ultrasonic cleaning,testing instrument,machine tool cooling,cylinder heat preservation,hot and cold switching system,etc.

使用条件 / Working Condition

高温热水 Thermal Conductivity Water	高温导热油 Thermal Conductivity Oil	乙二醇 Ethylene glycol	工作环境温度 Working Temperature	最高海拔 Maximum Elevation	最大承压 Max withstand pressure
+5°C~+160°C	+5°C~+200°C	-30°C~+180°C	-5°C~+40°C	1000m	10bar

规格性能参数 / Technical Parameter

型号/Model	口径/Diameter		电机/Motor					性能参数/Performance Parameter		泵浦自重 Pump Weight (kg)
	进口 Inlet	出口 Outlet	功率 Power	匹数 (Hp)	电压 Voltage (V)	频率 Frequency (Hz)	转速 Speed (r/min)	最高/额定扬程 Max/Rated Head (m)	最大流量 Max Capacity (L/min)	
WM-033(E)(S)	DN20	DN20	0.25	0.33	3Ø-380 1Ø-220	50	2760	15/12	30	9
WM-05(E)(S)	DN20	DN20	0.37	0.5	3Ø-380 1Ø-220	50	2760	28/22	42	9
WM-10(S)	DN20	DN20	0.75	1	3Ø-380 1Ø-220	50	2760	38/28	56	12.5
WM-20	DN25	DN25	1.5	2	3Ø-380	50	2760	55/30	110	18
WM-30N	DN40	DN32	2.2	3	3Ø-380	50	2760	85/50	140	24

*上述性能参数对应于水在20°C时以正常速度运输，性能及参数误差±10%。泵的性能随输送流体介质的比重及密度的不同而产生变化。
*The above characteristic testing is based on the water transferring with the normal speed under 20 degrees. character'serror is about 10%. The pump characters change according to the difference of the liquid mediums' proportion and density.

*N代表新款。"N" stands for new model .

*E代表不锈钢泵体；*The letter "E" means stainless steel pump body.

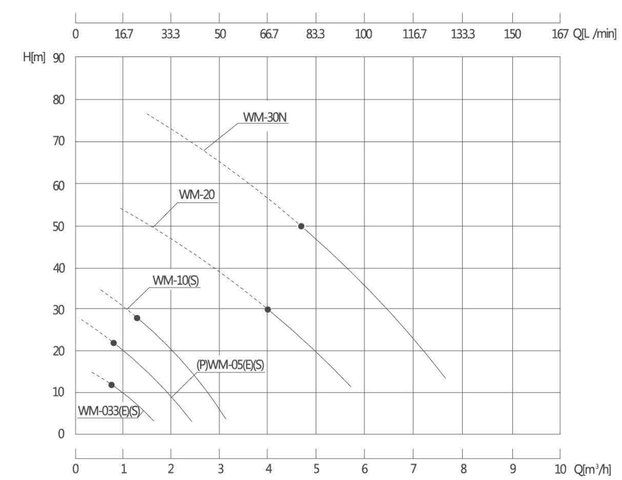

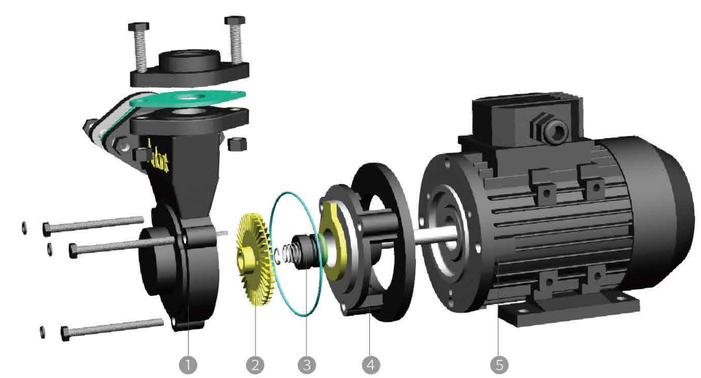

1. 泵盖 Pump Cover
2. 叶轮 Impeller
3. 机械轴封 Mechanical Seal
4. 泵体 Pump Body
5. 电机 Motor

☆ 本公司保留技术更改的权利，如有修改恕不另行通知。The company reserves the right to change the technology, if there is any change without notice

耐高温 耐低温 体积小 铸铁 不锈钢 低噪音 振动小 性能稳定

RGP
LARGE FLOW CENTRIFUGAL PUMP
大流量离心泵

RGP-30

产品特性

- 泵体材质多样化选择
- 密封进口材质
- 性能稳定
- 结构紧凑

FEATURES

- Diversified selection of pump body materials
- Sealed imported material
- Stable performance
- Compact structure

应用领域

模具控温、辊轮控温、反应釜夹套控温、冷凝水回收、食品设备、清洗设备、模板控温、料筒控温、冷热交换系统等。

APPLICATION AREA

Mold temperature controlling,roller temperature controlling,reaction kettle,condensate water recovery,food processing equipment,washing equipment,template temperature controlling,cylinder heat preservation,hot and cold switching system etc.

使用条件 / Working Condition

高温热水 Thermal Conductivity Water	高温导热油 Thermal Conductivity Oil	乙二醇 Ethylene glycol	工作环境温度 Working Temperature	最高海拔 Maximum Elevation	最大承压 Max withstand pressure
+5°C~+160°C	+5°C~+200°C	-30°C~+180°C	-5°C~+40°C	1000m	10bar

规格性能参数 / Technical Parameter

型号/Model	口径/Diameter		电机/Motor					性能参数/Performance Parameter		泵浦自重 Pump Weight (kg)
	进口 Inlet	出口 Outlet	功率 Power (kW)	匹数 (Hp)	电压 Voltage (V)	频率 Frequency (Hz)	转速 Speed (r/min)	最高扬程 Max Head (m)	最大/使用流量 Max/Use Capacity (L/min)	
RGP-10	DN40	DN40	0.75	1	3Ø-380	50	2760	18	165/133	18
RGP-20	DN50	DN40	1.5	2	3Ø-380	50	2760	22	235/167	25
RGP-30 (E)	DN50	DN40	2.2	3	3Ø-380	50	2760	28	315/233	32
RGP-30 (K) (Y)	DN50	DN32	2.2	3	3Ø-380	50	2760	28	300/200	28
RGP-40	DN50	DN32	3	4	3Ø-380	50	2900	35	300/255	37
RGP-50	DN50	DN40	4	5	3Ø-380	50	2900	38	367/267	60
RGP-75	DN50	DN40	5.5	7.5	3Ø-380	50	2900	42	400/300	65
RGP-100	DN65	DN50	7.5	10	3Ø-380	50	2900	50	680/400	86
RGP-120	DN65	DN50	9	12	3Ø-380	50	2900	55	1200/800	88
RGP-150E	DN100	DN100	11	15	3Ø-380	50	2900	32	1800/1300	89

*上述性能参数对应于水在20°C时以正常速度运输，性能及参数误差±10%。泵的性能随输送流体介质的比重及密度的不同而产生变化。
*The above characteristic testing is based on the water transferring with the normal speed under 20 degrees. character'serror is about 10%. The pump characters change according to the difference of the liquid mediums' proportion and density.

*E代表不锈钢泵体；K代表开式叶轮、不锈钢泵体。
*The letter "E" means stainless steel pump body; "K" means open impeller、 stainless steel pump body.

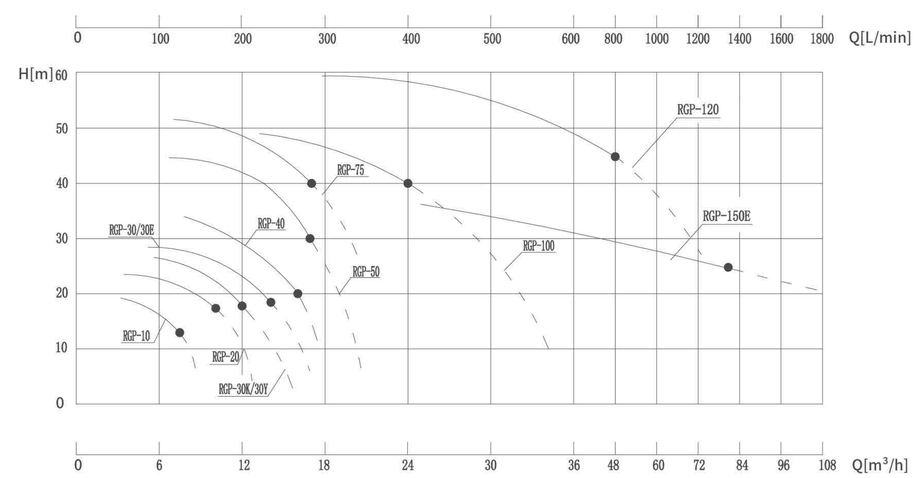

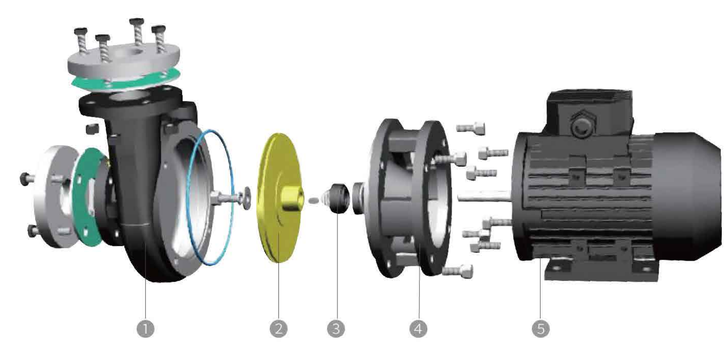

1. 泵盖 Pump Cover
2. 叶轮 Impeller
3. 机械轴封 Mechanical Seal
4. 轴封座 Shaft Seal Base
5. 电机 Motor

☆ 本公司保留技术更改的权利，如有修改恕不另行通知。The company reserves the right to change the technology, if there is any change without notice

耐高温 耐低温 体积小 铸铁 不锈钢 低噪音 振动小 性能稳定

RGZ

CASTING IRON / STAINLESS STEEL CENTRIFUGAL PUMP

铸铁/不锈钢离心泵

RGZ-75E

产品特性

- 泵体材质多样化选择
- 密封进口材质
- 性能稳定
- 结构紧凑

FEATURES

- Diversified selection of pump body materials
- Sealed imported material
- Stable performance
- Compact structure

应用领域

模具控温、辊轮控温、反应釜夹套控温、热压模板控温、挤出料筒控温、冷热交换系统、食品设备等。

APPLICATION AREA

Mold temperature controlling,roller temperature controlling,reaction kettle,hot-pressing equipment,extruding equipment,hot and cold switching system,food processing equipment,etc.

使用条件 / Working Condition

高温热水 Thermal Conductivity Water	高温导热油 Thermal Conductivity Oil	乙二醇 Ethylene glycol	工作环境温度 Working Temperature	最高海拔 Maximum Elevation	最大承压 Max withstand pressure
+5°C~+160°C	+5°C~+200°C	-30°C~+180°C	-5°C~+40°C	1000m	10bar

规格性能参数 / Technical Parameter

型号/Model	口径/Diameter		电机/Motor					性能参数/Performance Parameter		泵浦自重 Pump Weight (kg)
	进口 Inlet	出口 Outlet	功率 Power (kW)	匹数 (Hp)	电压 Voltage (V)	频率 Frequency (Hz)	转速 Speed (r/min)	最高扬程 Max Head (m)	最大/使用流量 Max/Use Capacity (L/min)	
RGZ-07	DN20	DN15	0.5	0.7	3Ø-380	50	2760	22	150/120	15
RGZ-10 (N) (E)	DN32	DN25	0.75	1	3Ø-380	50	2760	25	160/133	14
RGZ-20 (N) (E)	DN32	DN25	1.5	2	3Ø-380	50	2760	30	200/150	18.5
RGZ-30	DN50	DN32	2.2	3	3Ø-380	50	2760	36	240/188	33
RGZ-40E	DN50	DN32	3	4	3Ø-380	50	2900	40	300/255	32
RGZ-50E	DN50	DN40	4	5	3Ø-380	50	2900	45	367/267	55
RGZ-60E	DN50	DN40	4.5	6	3Ø-380	50	2900	52	400/285	60
RGZ-75E	DN65	DN50	5.5	7.5	3Ø-380	50	2900	45	750/500	63
RGZ-100E	DN65	DN50	7.5	10	3Ø-380	50	2900	52	1000/535	65

*上述性能参数对应于水在20°C时以正常速度运输，性能及参数误差±10%。泵的性能随输送流体介质的比重及密度的不同而产生变化。
*The above characteristic testing is based on the water transferring with the normal speed under 20 degrees. character'serror is about 10%. The pump characters change according to the difference of the liquid mediums' proportion and density.

*E代表不锈钢泵体。*The letter "E" means stainless steel pump body.

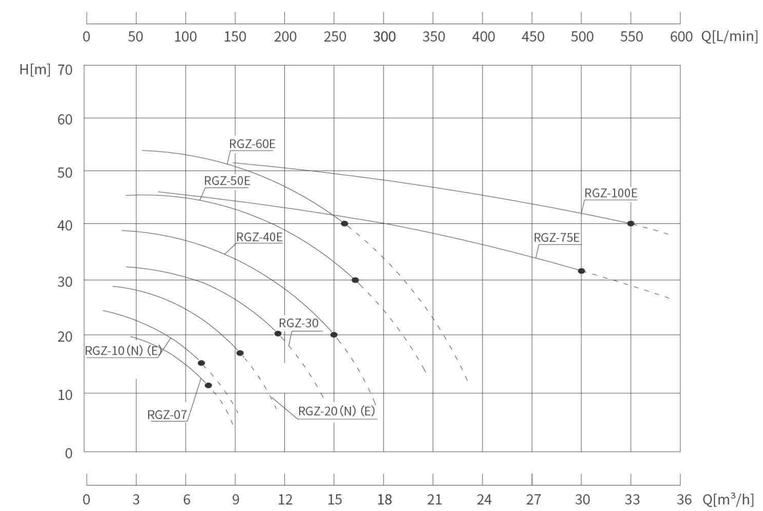

❶ 泵盖 Pump Cover
❷ 叶轮 Impeller
❸ 机械轴封 Mechanical Seal
❹ 轴封座 Shaft Seal Base
❺ 电机 Motor

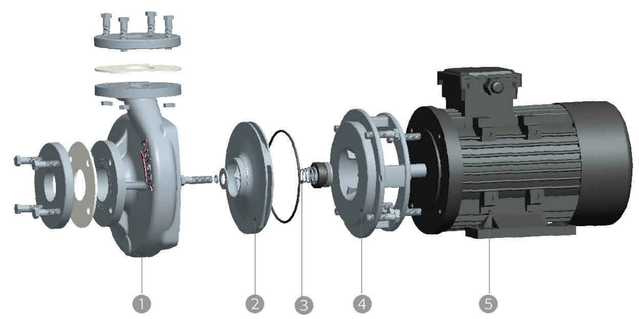

☆ 本公司保留技术更改的权利，如有修改恕不另行通知。The company reserves the right to change the technology, if there is any change without notice

耐腐蚀 体积小 不锈钢 低噪音 振动小 性能稳定

CPS (L)
STAINLESS STEEL
CENTRIFUGAL PUMP
不锈钢离心泵

CPS-20

产品特性

- 大流量
- 性能稳定
- 结构紧凑

FEATURES

- Big flow
- Stable performance
- Compact structure

应用领域

水厂过滤、游泳池、锅炉给水、冷凝系统、输送及分区送水和主管增压、流程水系统、清洗系统等。

APPLICATION AREA

Water plant filtration, swimming pool, boiler feedwater, condensation system, conveying and zoning water supply, main pipe pressurization, process water system, cleaning system, etc.

使用条件 / Working Condition

高温热水 Thermal Conductivity Water	乙二醇 Ethylene glycol	工作环境温度 Working Temperature	最高海拔 Maximum Elevation	最大承压 Max withstand pressure
+5°C~+90°C	-20°C~+90°C	-5°C~+40°C	1000m	6bar

规格性能参数 / Technical Parameter

型号/Model	口径/Diameter		电机/Motor					性能参数/Performance Parameter		泵浦自重 Pump Weight (kg)
	进口 Inlet	出口 Outlet	功率 Power (kW)	匹数 (Hp)	电压 Voltage (V)	频率 Frequency (Hz)	转速 Speed (r/min)	最高扬程 Max Head (m)	最大/使用流量 Max/Use Capacity (L/min)	
CPS-05(S)	G1-1/4"	G1"	0.37	0.5	3Ø-380 1Ø-220	50	2760	15	75/50	7.5
CPS-10(S)	G1-1/4"	G1"	0.75	1	3Ø-380 1Ø-220	50	2760	25	106/75	8.5
CPS-20	G1-1/2"	G1"	1.5	2	3Ø-380	50	2760	26	180/115	14.5
CPS-20L	G2"	G2"	1.5	2	3Ø-380	50	2760	15	300/200	18
CPS-30	G2-1/2"	G2"	2.2	3	3Ø-380	50	2760	16	400/240	21.5
CPL-50	DN65	DN40	4	5	3Ø-380	50	2760	33	683/416	55

*上述性能参数对应于水在20°C时以正常速度运输，性能及参数误差±10%。泵的性能随输送流体介质的比重及密度的不同而产生变化。
*The above characteristic testing is based on the water transferring with the normal speed under 20 degrees. character'serror is about 10%. The pump characters change according to the difference of the liquid mediums' proportion and density.

*S代表单项电源。*The letter "S" means single phase.

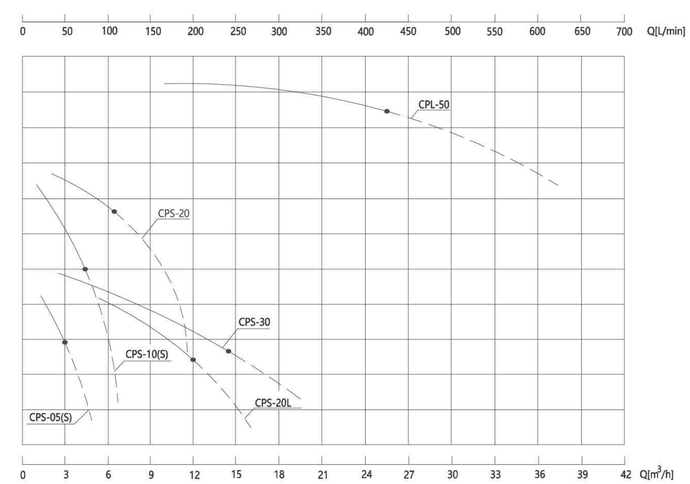

1. 泵盖 Pump Cover
2. 叶轮 Impeller
3. 机械轴封 Mechanical Seal
4. 轴封座 Shaft Seal Base
5. 电机 Motor

☆ 本公司保留技术更改的权利，如有修改恕不另行通知。The company reserves the right to change the technology, if there is any change without notice

体积小 铸铁 低噪音 振动小 性能稳定

ISW
HORIZONTAL CENTRIFUGAL PUMP
卧式清水离心泵

ISW25-10

产品特性
- 性能稳定
- 密封性能好
- 结构紧凑

FEATURES
- Stable performance
- Good sealing performance
- Compact structure

应用领域
冷冻设备、空调系统、管道增压、冷热交换设备等。

APPLICATION AREA
Chiller, air conditioning system,pipeline pressurization,hot and cold switching equipment,etc.

使用条件 / Working Condition

高温热水 Thermal Conductivity Water	乙二醇 Ethylene glycol	工作环境温度 Working Temperature	最高海拔 Maximum Elevation	最大承压 Max withstand pressure
+5°C~+90°C	-20°C~+90°C	-5°C~+40°C	1000m	6bar

规格性能参数 / Technical Parameter

型号/Model	口径/Diameter		电机/Motor					性能参数/Performance Parameter		泵浦自重 Pump Weight (kg)
	进口 Inlet	出口 Outlet	功率 Power (kW)	匹数 (Hp)	电压 Voltage (V)	频率 Frequency (Hz)	转速 Speed (r/min)	最高扬程 Max Head (m)	最大/使用流量 Max/Use Capacity (L/min)	
ISW25-05 (S)	G'1	G'1	0.37	0.5	3Ø-380 1Ø-220	50	2760	20	88/60	8
ISW25-10 (S)	G'1	G'1	0.75	1	3Ø-380 1Ø-220	50	2760	25	106/75	13
ISW40-10	G1-1/2"	G1-1/2"	0.75	1	3Ø-380	50	2760	22	123/90	13
ISW40-20	G1-1/2"	G1-1/2"	1.5	2	3Ø-380	50	2760	25	217/130	20.5

*上述性能参数对应于水在20°C时以正常速度运输，性能及参数误差±10%。泵的性能随输送流体介质的比重及密度的不同而产生变化。
*The above characteristic testing is based on the water transferring with the normal speed under 20 degrees. character'serror is about 10%. The pump characters change according to the difference of the liquid mediums' proportion and density.

*S代表单项电源。*The letter "S" means single phase.

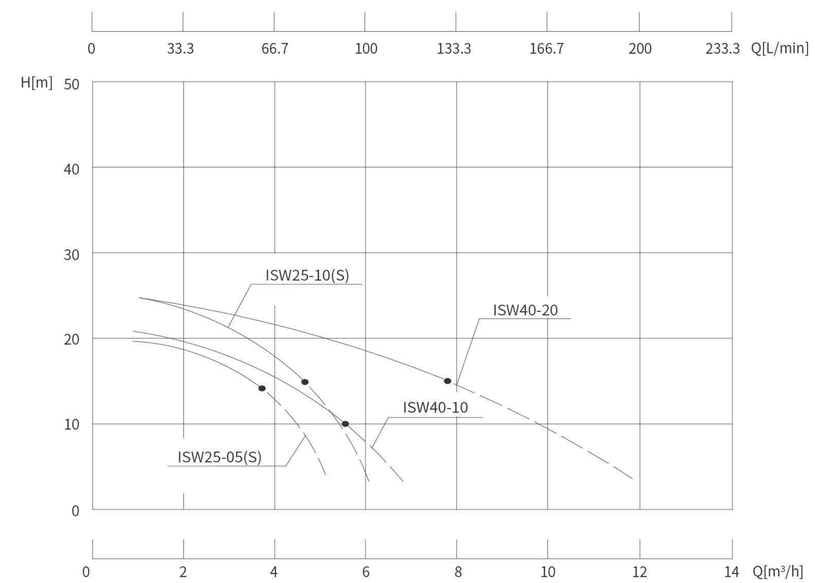

1. 泵盖 Pump Cover
2. 叶轮 Impeller
3. 机械轴封 Mechanical Seal
4. 轴封座 Shaft Seal Base
5. 电机 Motor

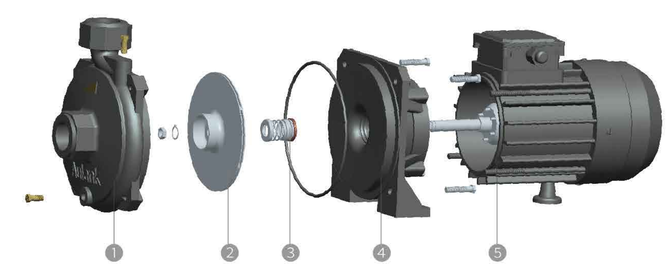

☆ 本公司保留技术更改的权利，如有修改恕不另行通知。The company reserves the right to change the technology, if there is any change without notice

耐高温 铸铁 低噪音 振动小 性能稳定

WRY-H
COUPLED HIGH TEMPERATURE OIL PUMP
联轴式高温热油泵

WRY-H 50-32-160EX

产品特性

- 分体式结构
- 维护便捷
- 性能稳定

FEATURES

- Split structure
- Convenient maintenance
- Stable performance

应用领域

导热油炉、热处理设备、模板控温、辊轮控温、反应釜夹套控温等。

APPLICATION AREA

Thermal oil furnace,heat treatment equipment,template temperature controlling,roller temperature controlling,reaction kettle,etc.

使用条件 / Working Condition

高温热油 Thermal Conductivity Oil	乙二醇 Ethylene glycol	最高海拔 Maximum Elevation	最大承压 Max withstand pressure
+5°C~+350°C	-5°C~+40°C	1000m	10bar

规格性能参数 / Technical Parameter

型号/Model	额定扬程 Rated Head (m)	额定流量 Rated Capacity (m^3/h)	转速 Speed (r/min)	功率 Power(kW)		效率% Efficiency	汽蚀余量 NPSH (m)
				轴功率 Shaft Power	配用功率 Motor Power		
20-20-125	22	1.5	2840	0.30	0.75	30	2
32-32-160	28	6.5	2800	1.91	1.5	35	2.3
40-25-160	31	10	2900	1.91	2.2	44	2.3
50-32-160	32	12.5	2900	2.31	3.0	47	2.3
50-32-200	50	12.5	2900	4.3	5.5	40	2.5
50-32-200A	32	16	2900	3.7	4.0	38	2.6
50-32-250	80	12.5	2900	8.5	11	32	2.5
50-32-250A	60	16	2900	8.7	11	30	2.5
65-50-160	32	20	2900	3.01	4.0	57.8	2.5
65-40-200	54	25	2900	7.07	7.5	52	2.5
65-40-200A	35	25	2900	4.84	5.5	52	2.7
65-40-250	80	25	2900	11.8	15	46	3.0
65-40-250A	51	20	2900	6.3	7.5	44	3.0
65-40-315	125	25	2900	22.41	30	38	3.0
65-40-315A	100	23	2900	17.02	22	36	3.0
80-50-200	50	50	2900	10.8	15	61	3.0
80-50-200A	42	45	2900	8.57	11	60	3.2
80-50-250	82	50	2900	19.59	22	57	3.0
80-50-250A	60	43	2900	12.8	15	55	3.1
80-50-315	125	50	2900	33.41	45	51	3.0
80-50-315A	100	45	2900	24.51	30	50	3.2
100-65-200	55	100	2900	20.95	22	71.5	4.1
100-65-200A	44	94	2900	16.11	22	70	4.1
100-65-200B	38	87	2900	13.22	15	68	4.2
100-65-250	83	100	2900	33.74	37	67	4.3

1. 泵体 Pump Body
2. 叶轮 Impeller
3. 泵体垫片 Pump Body Gasket
4. 填料杯 Filler Cup
5. 泵盖 Pump Cover
6. 油封 Oil Seal
7. 滑动轴承 Sliding Bearing
8. 轴承体 Bearing Body
9. 泵轴 Pump Shaft
10. 油封 Oil Seal
11. 调整垫片 Adjusting Washer
12. 轴承 Bearing
13. 垫片 Gasket
14. 油封 Oil Seal
15. 轴承压盖 Bearing Gland
16. 电机 Motor

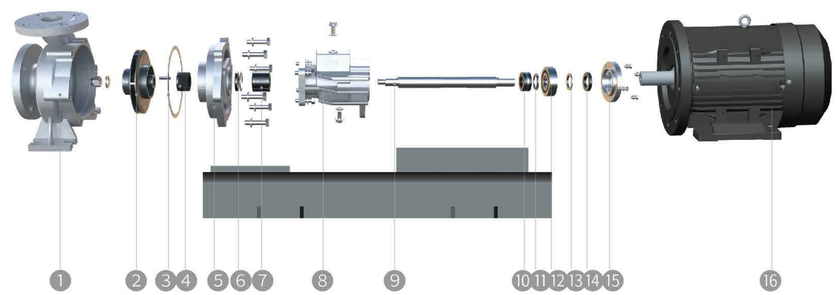

☆ 本公司保留技术更改的权利，如有修改恕不另行通知。The company reserves the right to change the technology, if there is any change without notice

耐腐蚀 铜 不锈钢 体积小 低噪音 振动小 安全可靠 节能

(P) VP
HIGH PRESSURE
VANE PUMP
高压叶片泵

PVP-020

产品特性

- 高压力
- 低噪音
- 流量随压力增加衰减平稳
- 选择屏蔽式结构，实现介质安全无泄漏

FEATURES

- High pressure
- Low noise
- The flow rate decreases steadily with increasing pressure
- Choose a shielded structure to achieve medium safety and no leakage

应用领域

激光设备冷却、充电桩冷却、医疗器械、等离子切割机、X射线和医用激光冷却系统、实验室设备冷却循环、高压清洗设备、反渗透系统、咖啡机、现调机、园林雾化等。

APPLICATION AREA

Laser equipment cooling,plasma cutting machines,X-ray and medical laser cooling systems,laboratory equipment cooling system,high pressure cleaning equipment reverse osmosis systems,coffe machine,beverage dispenser machine,garden spray equipment,charging pile cooling,medical equipment,etc.

使用条件 / Working Condition

高温热水 Thermal Conductivity Water	乙二醇 Ethylene Glycol	工作环境温度 Working Temperature	最高海拔 Maximum Elevation	最大承压 Max withstand pressure
+5°C~+90°C	-20°C~+90°C	-5°C~+40°C	1000m	16bar

规格性能参数 / Technical Parameter

型号/Model	口径/Diameter		电机/Motor					性能参数/Performance Parameter		泵浦自重 Pump Weight (kg)
	进口 Inlet	出口 Outlet	功率 Power (kW)	匹数 (Hp)	电压 Voltage (V)	频率 Frequency (Hz)	转速 Speed (r/min)	最高/额定扬程 Max /Rated Head (m)	最大流量 Max Capacity (L/h)	
VP(E)-020(G)(S)-70	G3/8"	G3/8"	0.15	0.2	3Ø-380 1Ø-220	50	1450	100/80	70	5
VP(E)-033(G)(S)-100	G3/8"	G3/8"	0.25	0.33		50	1450	160/120	100	8
VP(E)-05(G)(S)-200	G3/8"	G3/8"	0.37	0.5		50	1450	160/120	200	9.5
VP(E)-05(G)(S)-300	G3/8"	G3/8"	0.37	0.5		50	1450	160/120	300	9.5
VP(E)-05(G)(S)-400	G3/8"	G3/8"	0.37	0.5		50	1450	160/120	400	9.5
VP(E)-07(S)-800	G1/2"	G1/2"	0.55	0.7		50	1450	120/100	800	10.5
VP(E)-07(S)-1000	G1/2"	G1/2"	0.55	0.7		50	1450	120/100	1000	10.5

*上述性能参数对应于水在20°C时以正常速度运输，性能及参数误差±10%。泵的性能随输送流体介质的比重及密度的不同而产生变化。
The above characteristic testing is based on the water transferring with the normal speed under 20 degrees. character'serror is about 10%. The pump characters change according to the difference of the liquid mediums' proportion and density.

*E代表不锈钢泵体;G代表含有过滤器的泵体;S代表单相电源;DC代表直流电机。*The letter "E" means stainless steel pump body; "G" means pump body with filter; "S" means single phase; "DC" means permanent magnet synchronous motor.

*所有规格均可选配直流电机。*All specifications can be equipped with DC motor .

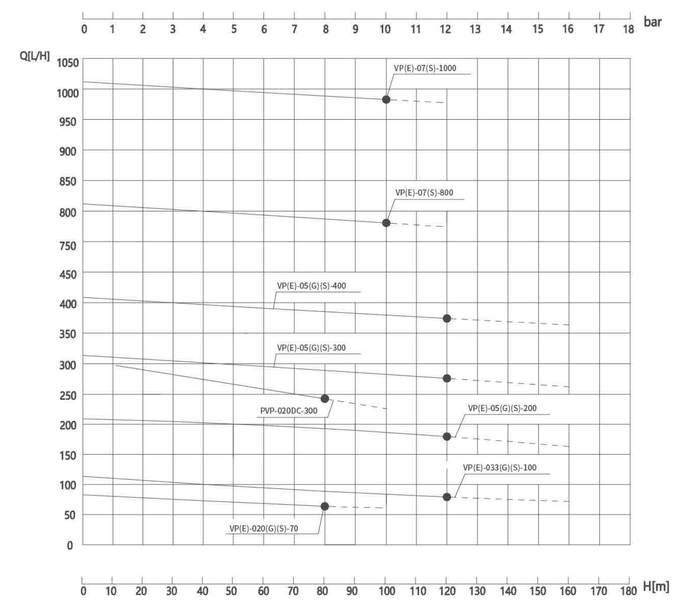

1. 压盖 Gland
2. 进出水室组件 Inlet And Outlet of Water Chambe
3. 泵体 Pump Body
4. 轴承 Bearing
5. 电机 Motor

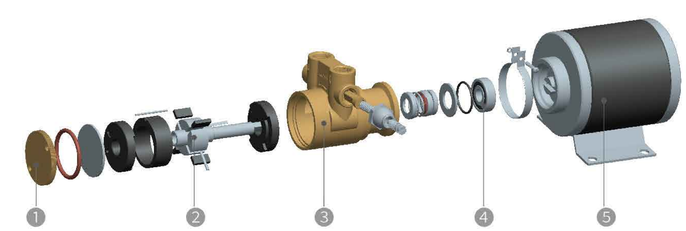

☆ 本公司保留技术更改的权利，如有修改恕不另行通知。The company reserves the right to change the technology, if there is any change without notice

耐腐蚀 耐高温+350°C 耐低温-100°C 体积小 不锈钢316 低噪音 振动小 安全可靠

MDC-X

MEDIUM AND LARGE MAGNETIC GEAR PUMP

中大型磁力齿轮泵

MDC-X50

产品特性

- 噪音降低5-13分贝
- 脉动降低70%
- 容积效率提高5-8%
- 适用范围宽泛
- 可定制化
- 稳定工况下计量精度可达1‰
- 可应用在高真空场景

FEATURES

- Noise reduced by 5-13 decibels
- Pulsation reduced by 70%
- Volumetric efficiency increaseD by 5-8%
- Wide applicability
- Customizable
- Under stable operating conditions, the measurement accuracy can reach 1 ‰
- Can be applied in high vacuum scenarios

标准行业

日化、精细化工、医药中间体及原料药、纺织印染、粘结剂、食品、油脂、塑料可降解、新材料、石化、煤化工、现代农业

STANDARD INDUSTRIES

Daily chemical, fine chemical, pharmaceutical internediates and raw materials, textile printing and dyeing,adhesives, food, oils and fats, biodegradable plastics, new materials, petrochemicals, coal chemical, modern agriculture

配套集成

如小型试验装置、高温高压反应金、强制循环装置、薄膜蒸发器、分子蒸馏、精馏塔、连续流反应器

SUPPORTING INTEGRATION

Such as small experimental devices, high temperature and high pressure reactors, forced circulation devicesthin film evaporators, molecular distillation, distillation towers, continuous flow reactors

使用条件 / Working Condition

介质温度 Medium Temperature	介质比重 Medium Density	环境温度 Ambient Temperature	最高海拔 Maximum Elevation
-40°C~+400°C	0.6~2.0	-50°C~+70°C	5000m

技术参数 / Technical parameter

压力 Pressure	流量 Flow	粘度 Viscosity	泵壳材质 Pump Housing Material	密封形式 Seal Form	连接方式 Connection Mode
0-5Mpa 5Mpa以上可定制	0.01-100m³	0.3-100000cps	304/316L/2205 2507/QT400	磁耦合驱动/机械密封 填料密封/唇型密封	螺纹连接/法兰连接 快装连接/卡套连接

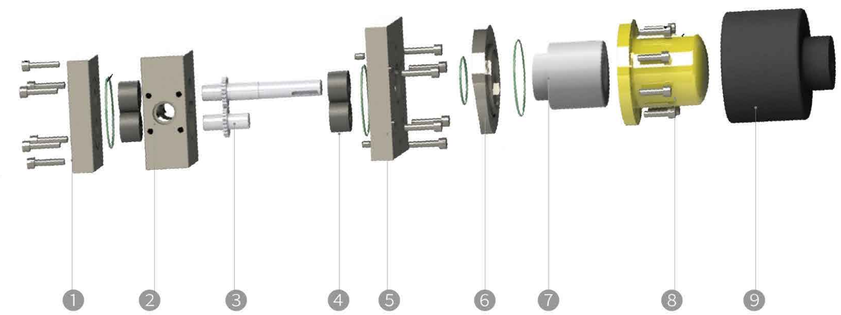

1. 后泵盖 Rear Pump Cover
2. 泵体 Pump Casing
3. 齿轮轴 Gear Shaft
4. D型套 D-Case
5. 前泵盖 Front Pump Cover
6. 连接盘 Connecting Disc
7. 内转子 Inner Rotor
8. 隔离套 Spacer Sleeve
9. 外转子 Outer Rotor

磁力驱动中大型齿轮泵

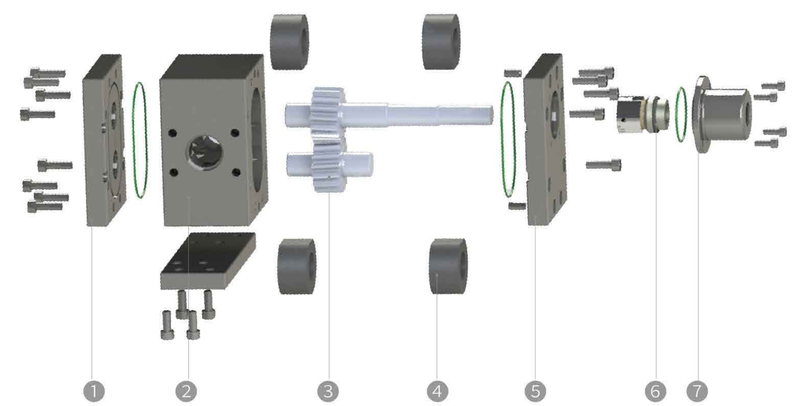

1. 后泵盖 Rear Pump Cover
2. 泵体 Pump Casing
3. 齿轮轴 Gear Shaft
4. D型套 D-Case
5. 前泵盖 Front Pump Cover
6. 机械密封 Mechanical Seal
7. 机封腔 Sealed Cavity

机械轴封中大型齿轮泵

☆ 本公司保留技术更改的权利，如有修改恕不另行通知。The company reserves the right to change the technology, if there is any change without notice

耐腐蚀 耐高温+150°C 耐低温-120°C 体积小 不锈钢316 低噪音 振动小 安全可靠

MDC-M
SMALL MICRO MAGNETIC GEAR PUMP
小微型磁力齿轮泵

MDC-M350

产品特性

- 输送粘度范围广
- 高自吸性能及高真空出料性能
- 输出无脉动、精度高
- 高耐温性及高耐磨性

FEATURES

- Wide range of viscosity for transport
- High self-priming performance and high vacuum discharge performance
- Output without pulsation and high accuracy
- High temperature resistance and high wear resistance

应用领域

化工、制药、实验仪器、新能源、半导体、低温深冷、精馏、喷雾系统、制氢机等

APPLICATION AREA

Chemical pharmaceutical,experimental equipment,new energy,semiconductor,low temperature cryogenic,dstillation,spray system,hydrogen generator,etc.

使用条件 / Working Condition

介质温度 Medium Temperature	介质比重 Medium Density	环境温度 Ambient Temperature	最高海拔 Maximum Elevation	最大承压 Max withstand pressure
-120°C~+150°C	0.6~2.0	-50°C~+70°C	5000m	100bar

规格性能参数 / Technical Parameter

型号/Model	口径/Diameter		功率 Power (kW)	电机/Motor		转速 Speed (r/min)	性能参数/Performance Parameter	
	进口 Inlet	出口 Outlet		交流电压 AC voltage (V)	直流电压 DC voltage (V)		最高压力 Max Pressure (Bar)	额定流量 Rated Capacity (L/min)
MDC-M020	NPT1/8"	NPT1/8"	根据实际的技术参数需求，计算选配	3Ø-380v	12-48	2-3500	20	0-0.6
MDC-M039	NPT1/8"	NPT1/8"		3Ø-380v	12-48	2-3500	20	0-1.3
MDC-M060	NPT1/8"	NPT1/8"		3Ø-380v	12-48	2-3500	20	0-1.9
MDC-M070	NPT1/8"	NPT1/8"		3Ø-380v	12-48	2-3500	20	0-2.2
MDC-M100	NPT1/4"	NPT1/4"		3Ø-380v	12-48	2-3500	20	0-2.9
MDC-M120	NPT1/4"	NPT1/4"		3Ø-380v	12-48	2-3500	20	0-3.9
MDC-M170	NPT1/4"	NPT1/4"		3Ø-380v	12-48	2-3500	20	0-5.4
MDC-M190	NPT1/4"	NPT1/4"		3Ø-380v	12-48	2-3500	20	0-6
MDC-M240	NPT3/8"	NPT3/8"		3Ø-380v	12-48	2-3500	20	0-8.2
MDC-M350	NPT3/8"	NPT3/8"		3Ø-380v	12-48	2-3500	20	0-10.5
MDC-M400	NPT3/8"	NPT3/8"		3Ø-380v	12-48	2-3500	20	0-12.6
MDC-M600	NPT3/8"	NPT3/8"		3Ø-380v	12-48	2-3500	20	0-18.9
MDC-M900	NPT3/4"	NPT3/4"		3Ø-380v	12-48	2-3500	20	0-28
MDC-M1200	NPT3/4"	NPT3/4"		3Ø-380v	12-48	2-3500	20	0-38
MDC-M1700	NPT3/4"	NPT3/4"		3Ø-380v	12-48	2-3500	20	0-55
MDC-M2600	NPT1"	NPT1"		3Ø-380v	12-48	2-3500	20	0-65

1. 泵盖 Pump Cover
2. 中承 Median Support
3. 齿轮轴 Gear Shaft
4. 底座 Base
5. 内磁体 Inside Magnet
6. 隔离套法兰盘 Isolation Sleeve Flange
7. 支架 Support
8. 外磁体 Outside Magnet
9. 电机 Motor

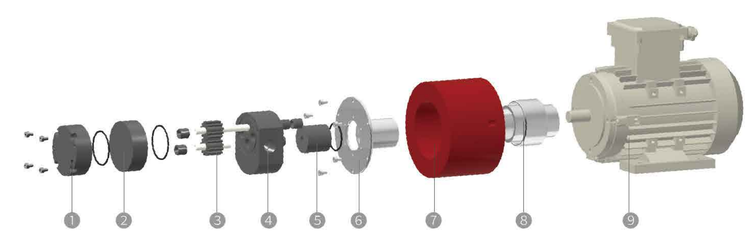

☆ 本公司保留技术更改的权利，如有修改恕不另行通知。The company reserves the right to change the technology, if there is any change without notice

TECHNICAL SUPPORT
AND AFTER-SALES SERVICE
技术支持与售后服务

售前技术支持
PRE SALES TECHNICAL SUPPORT

技术对接咨询服务
Technical docking consulting services

行业应用服务方案
Industry application service solutions

产品OEM定制开发
Product OEM custom development

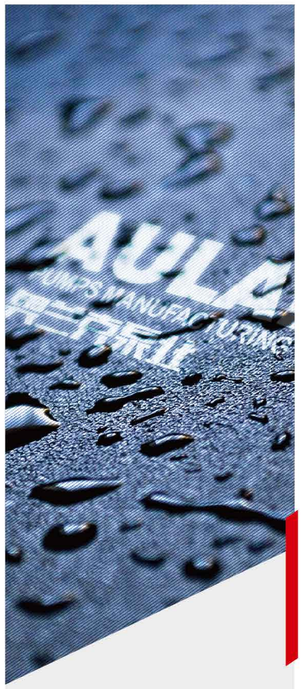

售中应用交流
IN SALES APPLICATION COMMUNICATION

保障快交准交服务
Ensure fast delivery and punctual delivery services

全程技术应用指导
Technical application guidance throughout the process

提供安装调试服务
Provide installation and commissioning services

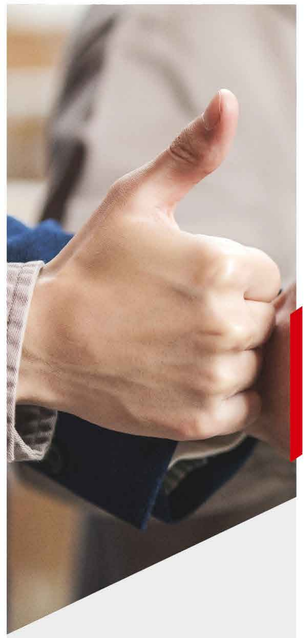

售后专业服务
AFTER SALES PROFESSIONAL SERVICE

快速响应专业服务
Quick response professional services

提供产品升级解决方案
Provide product upgrade solutions

提供售后维修保养服务
Provide after-sales maintenance services

NEW MATERIALS
NEW TECHNOLOGIES
新材料/新技术

陶瓷隔离套
Ceramic isolation sleeve

PEEK隔离套
PEEK isolation sleeve

哈氏合金隔离套
Hastelloy isolation sleeve

PPS叶轮
PPS impeller

PEEK叶轮
PEEK impeller

PPS泵体
PPS pump body

旋涡式：半开式叶轮、闭式叶轮
Vortex type: semi open impeller, closed impeller

离心式：闭式叶轮、半开式叶轮
Centrifugal: closed impeller, semi open impeller

陶瓷轴承
Ceramic bearings

流体抛光泵盖
Fluid polished pump cover

☆ 本公司保留技术更改的权利，如有修改恕不另行通知。The company reserves the right to change the technology, if there is any change without notice

INDUSTRY
APPLICATIONS
行业应用

新能源行业
New energy industry

一体压铸、制氢、充电桩冷却、理电隔膜喷涂、除铁机、电解液，添加剂、NMP溶剂及回收再利用，高低温电池包检测、发动机测试、电机测试、氢能源、光伏、储能
Integrated die-casting, hydrogen production, charging pile cooling, diaphragm coating, iron removal machine, electrolyte, additives, NMP solvent and recycling, high and low temperature battery pack testing, engine testing, motor testing, hydrogen energy, photovoltaic, energy storage

半导体行业
Semiconductor industry

刻蚀、封装测试、电子特气、集成电路冷却chiller、IGBT测试、半导体清洗、PVD、CVD、光刻机、电子化学品、CMP抛光液、半导体清洗设备、光刻胶
Etching, packaging testing, electronic specialty gas, integrated circuit cooling chiller, IGBT testing, semiconductor cleaning, PVD, CVD, lithography machine, electronic chemicals, CMP polishing solution, semiconductor cleaning equipment, photoresist

化工行业
Chemical industry

隔板精馏、热泵精馏、超高纯度化学品精馏、计量撬装、染料、食品添加剂、香料、催化剂及助剂、高分子聚合物、BDO、DMF、乙二醇、双氧水、PTA (对苯二甲酸)、顺杆、NMF
Partition distillation, heat pump distillation, ultra-high purity chemical distillation, metering and installation, dyes, food additives, fragrances, catalysts and additives, high molecular polymers, BDO, DMF, ethylene glycol, hydrogen peroxide, PTA (terephthalic acid), cis bar, NMF

医药行业
Pharmaceutical industry

冻干机、制药蒸馏设备、微通道反应器、医药中间体、核磁共振冷却设备、医疗灭菌柜、医疗清洗机、蒸汽发生器
Freeze-drying machines, pharmaceutical distillation equipment, microchannel reactors, pharmaceutical intermediates, nuclear magnetic resonance cooling equipment, medical sterilization cabinets, medical cleaning machines, steam generators

温控行业
Temperature control industry

液氮分装、VOCS气体冷凝回收、冷水机、冷油机、制冷剂、液态氟利昂、模温机、TCU温度控制系统
Liquid nitrogen packaging, VOCS gas condensation recovery, chillers, oil coolers, refrigerants, liquid fluorocarbons, mold temperature machines, TCU temperature control systems

环保行业
Environmental protection industry

矿山加药机/电微分加药机、臭氧发生器、臭氧清洗设备、气浮机、电镀生产线、水处理、超声波清洗设备
Mining dosing machine/electric differential dosing machine, ozone generator, ozone cleaning equipment, air flotation machine, electroplating production line, water treatment, ultrasonic cleaning equipment

食品行业
Food industry

咖啡机、食品撬装、食品油炸线、滤油机 Coffee machine, food pry, food frying line, oil filter machine

APPLICATION
CASE
应用案例

精细化工
医药中间体

Fine Chemical Industry
Pharmaceutical
Intermediate

矿山加药计量撬装
NMP溶液回收撬装

Mine dosing metering skid
NMP solution recovery skid

光学精密控温
半导体精密控温

Optical precision temperature control
Semiconductor precision temperature control

新能源一体压铸控温
新能源高低温检测

New energy integrated die casting temperature control
New energy high and low temperature detection

☆ 本公司保留技术更改的权利，如有修改恕不另行通知。The company reserves the right to change the technology, if there is any change without notice